EMR MODEL 4142

PROPORTIONAL BANDWIDTH (PBW)

TUNABLE DISCRIMINATOR

(REVISION F)

INSTRUCTION MANUAL

EMR MODEL 4142
PROPORTIONAL BANDWIDTH (PBW)
TUNABLE DISCRIMINATOR
(REVISION F)

EFFECTIVE FOR
SERIAL NUMBERS
68, 78, 79, 81, AND UP

PRINTED MAY 1972
Revision F - May 1978

LORALLE DATA SYST.

SANGAMO WESTON
Schlumberger

P. O. 3041 • SARASOTA, FLORIDA 33578 USA • TEL: 813-371-0811 • TELEX: 052-890 • TWX: 810-864-0406

34230

JULY 1982

Copyright© 1982 by Sangamo Weston, Inc.

All rights reserved. No part of this manual may be reproduced or utilized in any form or by any means, electronic or mechanical, including photocopying, recording, or by information storage and retrieval system, without permission in writing.

Inquiries should be addressed to:
Sangamo Weston, Inc.
Data Systems Division Publications
P.O. Box 3041
Sarasota, Florida 33578

Printed in U.S.A.

NOTICE

IN THE EVENT THIS EQUIPMENT MUST BE RETURNED TO EMR FOR ANY REASON, SPECIAL CARE MUST BE EXERCISED IN PACKAGING FOR SHIPMENT. CARTON WITHIN A CARTON TYPE PACKING, WITH FOAM SUPPORT AND SEPARATORS IS RECOMMENDED TO PREVENT SHIPPING DAMAGE. SHOULD ANY INFORMATION BE REQUIRED REGARDING PACKAGING OF EMR EQUIPMENT, CONTACT EMR-TELEMETRY, SARASOTA, FLORIDA.

August, 1970

MANUAL CHANGE NOTICE #1

EFFECTIVITY: Input Card Printed-Wiring Assembly (Assy. No. 17450), serial numbers 73, 82, 83, 84, 106, 109, 111 through 125, 128, and 129 and up.

DESCRIPTION: Diodes CR13, CR15, CR18, and CR20 were changed to type 1N752A in order to improve recovery from "Out-of-Range" mode. The complete parts description for these components is as follows:

DIODE, 1N752A Zener, 5.6V; 088-99-00199; Spec; 642-06.

MANUAL AREAS AFFECTED: Figure 5-5 and Table 6-1 (page 6-9).

August, 1970

MANUAL CHANGE NOTICE #2

EFFECTIVITY: The following configurations of the Pole Pair Printed-Wiring Assembly have been changed:

Assy. No.	Serial Nos.
16657 (Basic)	Serial Nos. 100 and Up.
16657-1	Serial Nos. 101 and Up.
16657-2	Serial Nos. 100 and Up.
16657-3	Serial Nos. 42, 100 through 103, 105 through 109, 111 through 121, 123, and 125 and Up.
16657-4	Serial Nos. 6, 101 through 117, and 119 and Up.
16657-5	Serial Nos. 37, 100, 101, 103 through 109, 111 through 113, and 115 and Up.

DESCRIPTION: The value for resistors R15 and R30 was changed to stop oscillations in Z1 and Z2, respectively. The complete part description for R15 and R30 is as follows:

RESISTOR, 100 Ohms ±5%, 1/4W; 616-02-10009;
ALLEN BRAD; RC07GF101J.

MANUAL AREAS AFFECTED: Figure 5-15 and Table 6-1 (pages 6-56, 6-57, 6-61, 6-62, 6-66, 6-67, 6-71, 6-72, 6-76, 6-77, 6-81, and 6-82).

April 1971

MANUAL CHANGE NOTICE #3

EFFECTIVITY: Model 4142 PBW Tunable Discriminator, serial numbers 68 through 71, 73, 78, and up.

DESCRIPTION: Resistor R116 is added to the Limiter, Detector, and Single Pole Card A2A8. This resistor is shown in the following diagram --

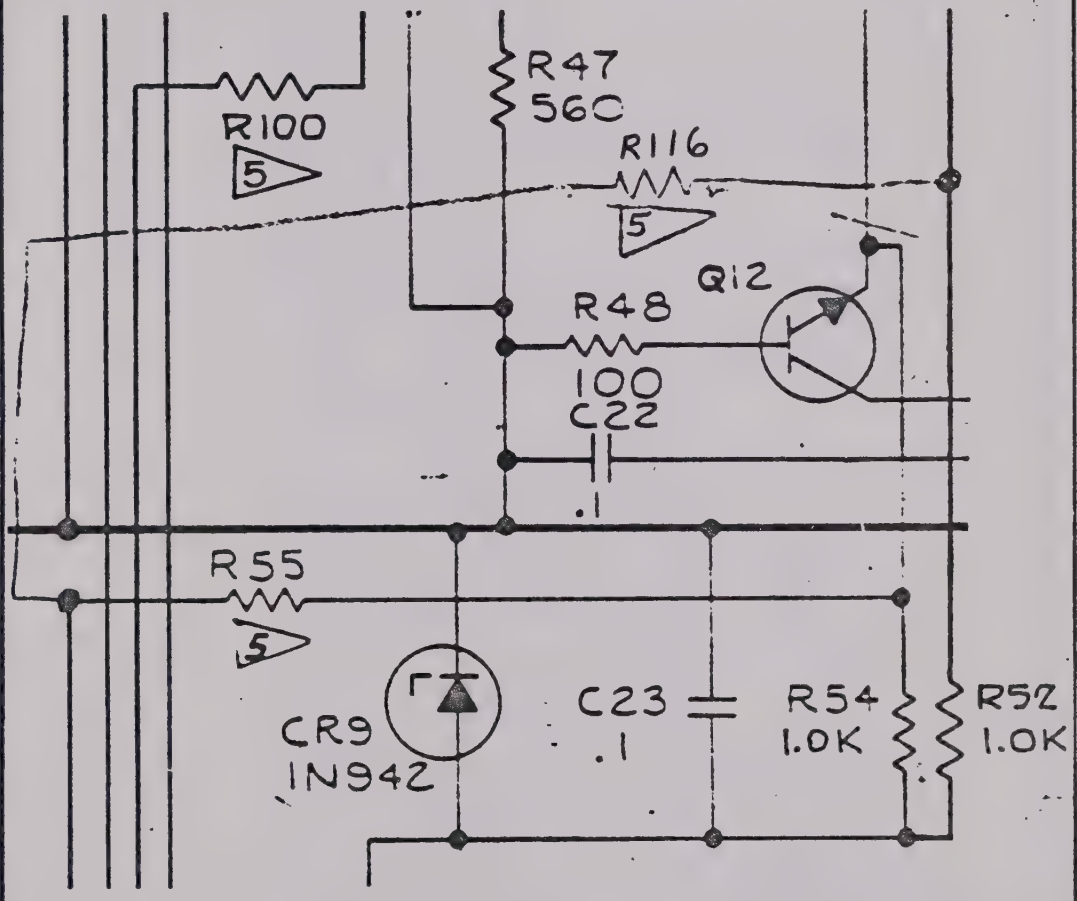

This portion of the card schematic should be used in conjunction with Figure 5-14 of this manual. The physical location of the resistor is shown in Figure 5-13, while the resistor part information is contained in Parts List 17396 of Section 6.

May 1972

MANUAL CHANGE NOTICE #4
(Page 1 of 3)

EFFECTIVITY: Model 4142 PBW Tunable Discriminator, serial numbers 116, 118, and 120 and up.

DESCRIPTION: The pole-pair LPOF printed-wiring cards (A2A10, A2A11, and A2A12) are changed to provide improved performance. The card assembly and schematic diagrams are shown in Figures 5-15 and 5-16. Component changes to this card are listed as follows --

C22 -- Deleted.

C26 -- Deleted.

R13 -- Changed to 100Ω ±5%, 1/4W; EMR STOCK NO. 616-02-10009; VENDOR NAME is Allen-Bradley; VENDOR PART NO. RC07GF101J.

R14 -- Deleted.

R15 -- Changed to 5.1K ±5%, 1/4W; EMR STOCK NO. 616-02-51000; VENDOR NAME is Allen-Bradley; VENDOR PART NO. RC07GF512J.

R16 -- Changed to 100Ω ±5%, 1/4W; EMR STOCK NO. 616-02-10009; VENDOR NAME is Allen-Bradley; VENDOR PART NO. RC07GF101J.

R28 -- Changed to 100Ω ±5%, 1/4W; EMR STOCK NO. 616-02-10009; VENDOR NAME is Allen-Bradley; VENDOR PART NO. RC07GF101J.

R29 -- Changed to 1K ±10%, 0.75W; EMR STOCK NO. 201-98-00138; VENDOR NAMES are Beckman/Bourns; VENDOR PART NO. 79PR1K/3009P-1-102.

R30 -- Changed to 5.1K ±5%, 1/4W; EMR STOCK NO. 616-02-51000; VENDOR NAME is Allen-Bradley; VENDOR PART NO. RC07GF512J.

R31 -- Changed to 100Ω ±5%, 1/4W; EMR STOCK NO. 616-02-10009; VENDOR NAME is Allen-Bradley; VENDOR PART NO. RC07GF101J.

U1 & U2 -- Integrated Circuit, Voltage Follower, High-Speed (Mounted in the Z1 and Z2 location); EMR STOCK NO. 046-34-00014; VENDOR NAME is NSC; VENDOR PART NO. LM310H.

Z1 & Z2 -- Removed. Reference designations changed to U1 and U2.

Because of the changes to these cards, the test procedure as provided in Section 5 of the 4142 manual is revised. This procedure is supplied on page 5-7, paragraph 5.3.5.1, step (d). A revised step (d) is provided as follows --

d. Using a DC voltmeter, measure the input level to the output amplifier at test jack A2A12TP3. The voltage level should be +1 volt ±20 millivolts. If normal indication cannot be obtained, adjust the LPOF circuit as follows:

1. Apply a ground to test jack TP1 on the first pole-pair card of the discriminator.

2. Connect the voltmeter to test jack TP3.

3. Adjust potentiometer R29 for an indication as close to 0 volt as possible.

4. Repeat steps (2) and (3) for the second and third pole-pair cards, if applicable, leaving the ground of step (1) connected to the first pole-pair card.

CAUTION

Remove the ground before replacing the FM detector card.

5. Replace the FM detector card.

A revised schematic diagram of the pole-pair card is shown in Figure 1.

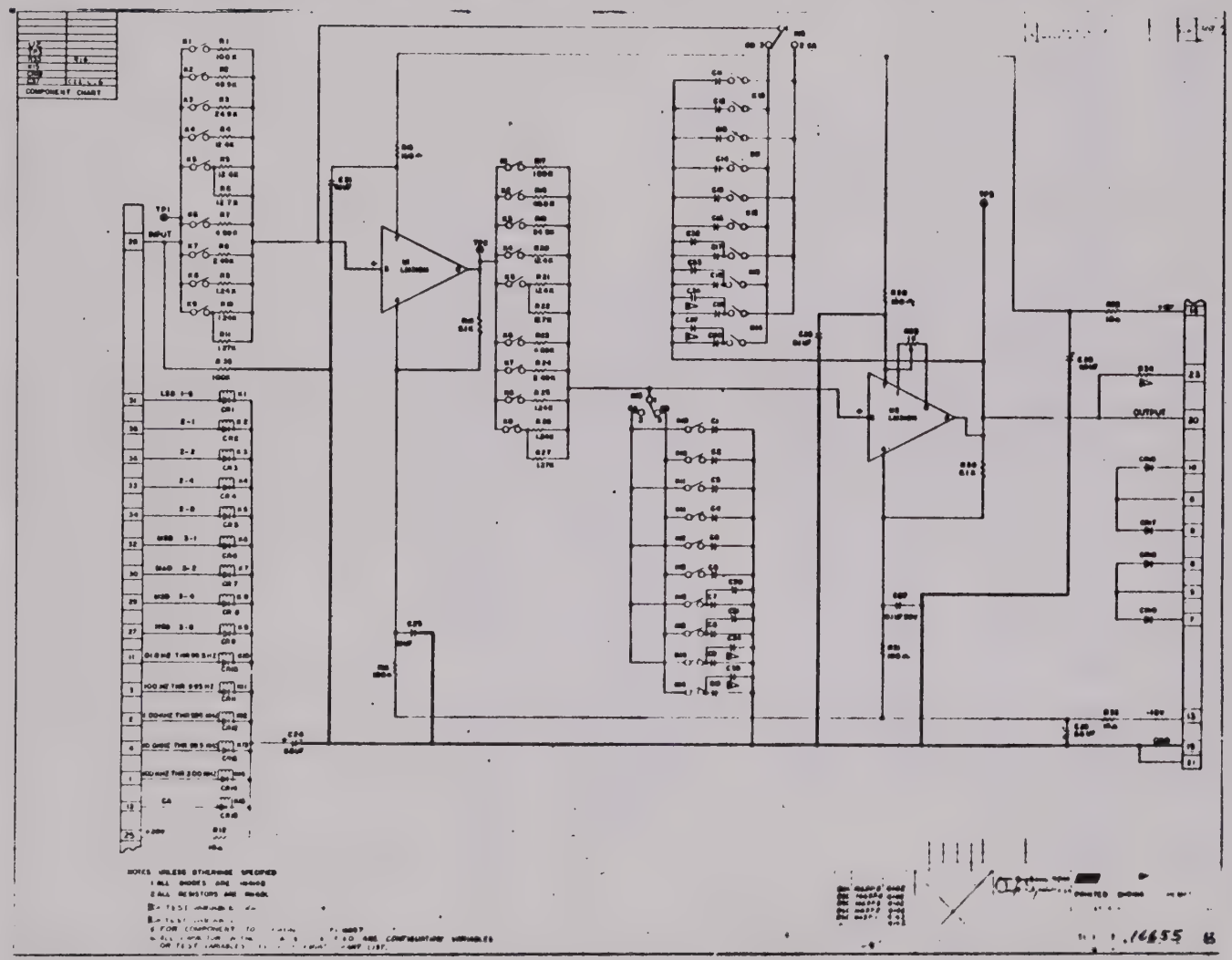

MANUAL CHANGE NOTICE #4
(Page 3 of 3)

Figure 1. Pole-Pair Cards A2A10, A2A11, and A2A12 Schematic Diagram

May 1972

MANUAL CHANGE NOTICE #5
(Page 1 of 2)

EFFECTIVITY: Model 4142 PBW Tunable Discriminator, serial number 119 and up.

DESCRIPTION: Component and wiring changes are made on the Limiter, Detector, and Single Pole Filter Printed-Wiring Card (A2A8). The component changes are listed as follows --

C53 & C58	--	Changed to 3 pF ±0.5 pF, 500V; EMR STOCK NO. 304-01-00309.
K35	--	Changed to EMR STOCK NO. 219-98-00046; VENDOR NAME is Hathaway Ins.; VENDOR PART NO. 65627-8/GP-2C-26FCD.
R71 & R96	--	Changed to 20K ±30%, 1/2W; EMR STOCK NO. 201-98-00063; VENDOR NAME is Beck Instr.; VENDOR PART NO. 62PR20K.
R97	--	Deleted.
R108	--	Deleted.
U1 & U2	--	Integrated Circuit, Compensated Operational Amplifier (Mounted in the Z1 and Z2 location); EMR STOCK NO. 046-45-00004; VENDOR NAME is Harris Semi.; VENDOR PART NO. HA2-2525.
Z1 & Z2	--	Removed. Reference designation changed to U1 and U2.

Because of the component changes, certain printed-wiring changes are made on the card. These changes affect two circuit locations. The revised circuit areas are shown as follows (ref. Figure 5-14) --

(IN LOWER RIGHT SECTION)

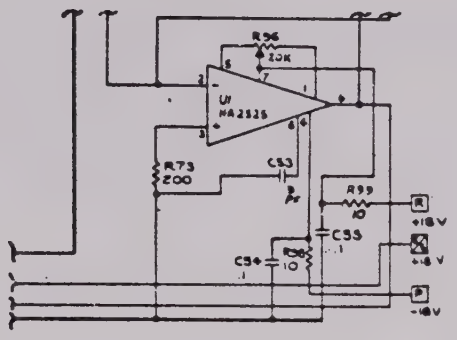

(IN CENTER LEFT SECTION)

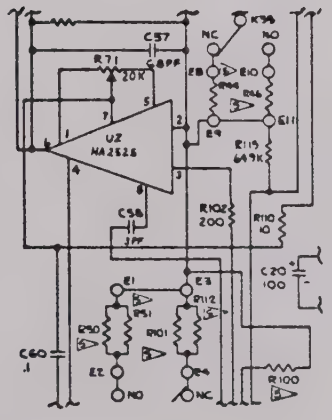

April 1973

MANUAL CHANGE NOTICE #6

EFFECTIVITY: Model 4142 PBW Tunable Discriminator, serial number 1 and up.

DESCRIPTION: Capacitor C1 on rear panel assembly A3 is changed to the following (ref. Figures 5-19/5-20 and parts list page 6-78) --

C1 -- CAPACITOR, 2.7 μF ±20%, 50V;
EMR STOCK NO. 301-23-27003;
VENDOR NAME is Erie;
VENDOR PART NO. 8141-050-651-275M.

April 1973

MANUAL CHANGE NOTICE #7

EFFECTIVITY: Model 4142 PBW Tunable Discriminator, serial number 135 and up.

DESCRIPTION: Certain components changes are made on the BPIF Printed-Wiring Cards (#1 and #2). The components and card assemblies are listed as follows --

a. BPIF Section 1 Card A2A5 (Figure 5-8 and Pages 6-18 and 6-19): Capacitors C8, C30, C32, C34, C38, C46, and C49 are changed to test variables.

b. BPIF Section 2 Card A2A6 (Figure 5-10 and Page 6-25): Capacitors C32 and C38 are changed to test variables. Capacitor C42 is changed to the following --

C42 -- CAPACITOR, 95 pF ± 1%, 500V;
EMR STOCK NO. 304-20-09509.

EMR MODEL 4142

LIST OF EFFECTIVE PAGES

Dates of issue for basic and revisions are:

Basic	November 1969
Revision A	May 1970
Revision B	August 1970
Revision C	January 1971
Revision D	April 1971
Revision E	May 1972
Revision F	May 1978

Page No.	Rev. Letter
*Title	F
i and ii	Basic
iii	C
iv	A
*v	F
1-1 thru 1-8	Basic
2-1	C
2-2 and 2-3	Basic
2-4 and 2-5	B
3-1	C
3-2 thru 3-8	Basic
3-9	A
3-10 thru 3-12	Basic
3-13 thru 3-14	A
4-1	Basic
4-2	D
4-3	Basic
4-4	A
4-5 and 4-6	C
4-7 thru 4-9	Basic
4-10	D
4-11	C
4-12	Basic
4-13	A
4-14	Basic
4-15	D
4-16 thru 4-18	Basic
5-1 and 5-2	Basic
5-3	E
5-4 thru 5-9	D
5-10	B
*5-11	F
5-12	D
5-13 and 5-14	C
5-15 and 5-16	D
5-17 and 5-18	C
*5-19 thru 5-23	F
5-24	C
*5-25 thru 5-27	F
5-28 and 5-28A	C
5-28B	E
*5-29 and 5-30	F
5-31	A
5-32	C
5-33	B
*5-34	F
5-35 thru 5-37	B
6-1 and 6-2	Basic
6-3 thru 6-5	C
*6-6 thru 6-56	F
6-57 thru 6-72	C

* The asterisk indicates pages that changed in the current revision.

TABLE OF CONTENTS

SECTION		PAGE
1	GENERAL DESCRIPTION	1-1
	1.1 Introduction	1-1
	1.2 Functional Description	1-2
	1.3 Physical Description	1-2
2	SPECIFICATIONS	2-1
	2.1 General	2-1
	2.2 Electrical Specifications	2-1
	2.2.1 Input Characteristics	2-1
	2.2.2 Output Characteristics	2-2
	2.3 Mechanical Specifications	2-4
3	INSTALLATION AND OPERATION	3-1
	3.1 Installation	3-1
	3.2 Operation	3-1
	3.2.1 Local Mode of Operation	3-1
	3.2.1.1 Initial Checks and Adjustments	3-8
	3.2.1.2 Typical Operational Setup Procedure	3-9
	3.2.2 Remote Mode of Operation	3-10
	3.2.3 Tape-Speed Compensation (TSC) System	3-10
4	THEORY OF OPERATION	4-1
	4.1 General	4-1
	4.2 General Theory of Operation	4-1
	4.3 Detailed Theory of Operation	4-4
	4.3.1 Programming Control	4-4
	4.3.2 Input Control Function	4-4
	4.3.2.1 Band-Pass Input Filter	4-4
	4.3.2.2 INPUT Meter Control and Zero Signal Detector	4-6
	4.3.2.3 Out-of-Range Detector	4-7
	4.3.3 FM Detection Circuit Group	4-8
	4.3.3.1 Limiter Function	4-8
	4.3.3.2 Detector and Single Pole Functions	4-11
	4.3.4 Tape-Speed Compensation	4-12
	4.3.5 Low-Pass Output Filter and Output Amplifier Circuit Group	4-14
	4.3.5.1 Low-Pass Output Filter	4-14
	4.3.5.2 Output Amplifier Circuit	4-16
	4.3.6 DC Power Circuits	4-17

TABLE OF CONTENTS (CONT'D.)

SECTION			PAGE
5	MAINTENANCE		5-1
	5.1	General	5-1
	5.2	Troubleshooting Guide	5-1
	5.3	Checkout and Adjustment	5-2
		5.3.1 Test Equipment Required	5-2
		5.3.2 Voltage Regulators	5-3
		5.3.3 Input Control and Band-Pass Circuits Checkout Procedures	5-3
		5.3.3.1 Band-Pass Input Filter Checkout Procedure	5-3
		5.3.3.2 Zero Signal Detector Checkout and Adjustment Procedure	5-4
		5.3.3.3 INPUT Meter Circuit Checkout Procedure	5-4
		5.3.3.4 Out-of-Range Detector Checkout Procedure	5-5
		5.3.4 FM Detector Circuit Group Checkout Procedures	5-5
		5.3.4.1 Limiter Circuit Checkout and Adjustment Procedure	5-5
		5.3.4.2 Detector Circuit Checkout Procedure	5-6
		5.3.5 Low-Pass Output Filter and Output Amplifier Circuit Group Checkout Procedures	5-6
		5.3.5.1 LPOF Checkout and Adjustment Procedure	5-7
		5.3.5.2 Output Amplifier Checkout and Adjustment Procedure	5-7
		5.3.6 Tape-Speed Compensation (TSC) Circuit Checkout and Adjustment Procedure	5-9
6	PARTS LISTS AND RECOMMENDED SPARES		6-1
	6.1	General	6-1
	6.2	Parts List Description	6-1
	6.3	Recommended Spares	6-1
	6.4	Provisioning Considerations	6-2
	6.5	Ordering Instructions	6-2

LIST OF ILLUSTRATIONS

FIGURE		PAGE
1-1	Model 4142 PBW Tunable Discriminator Simplified Block Diagram	1-3
1-2	EMR Model 4142 PBW Tunable Discriminator Major Assemblies	1-5
1-3	Card File Assembly A2 Printed-Wiring Card Complement	1-6
2-1	Variable Chart	2-5
3-1	Model 4142 PBW Tunable Discriminator Rear Panel Configuration	3-2
3-2	Front Panel Assembly (A1) Operating Controls, Indicators, and Test Points	3-4
3-3	REMOTE CONTROL Connector A3J5 Pin-Location Diagram	3-10
3-4	Tape-Speed Compensation System Block Diagram	3-10
4-1	Model 4142 Functional Block Diagram	4-2
4-2	Input Control and BPIF Circuit Group Functional Block Diagram	4-5
4-3	Out-of-Range Detector Simplified Schematic Diagram	4-9
4-4	FM Detector Circuit Group Functional Block Diagram	4-10
4-5	Tape-Speed Compensation Circuit Group Simplified Logic Diagram	4-13
4-6	Low-Pass Output Filter and Output Amplifier Circuit Group Functional Block Diagram	4-15
5-1	Model 4142 PBW Tunable Discriminator Major Assembly Locations	5-10
5-2	Subpanel Assembly A1 Assembly Diagram	5-11
5-3	Subpanel Assembly A1 Wiring Diagram	5-12
5-4	Card Chassis A2 Wiring Diagram	5-13
5-5	Input Card A2A3 Assembly Diagram	5-19
5-6	Input Card A2A3 Schematic Diagram	5-20
5-7	BPIF Section 1 Card A2A5 Assembly Diagram	5-21
5-8	BPIF Section 1 Card A2A5 Schematic Diagram	5-22
5-9	BPIF Section 2 Card A2A6 Assembly Diagram	5-23
5-10	BPIF Section 2 Card A2A6 Schematic Diagram	5-24
5-11	TSC Card A2A7 Assembly Diagram	5-25
5-12	TSC Card A2A7 Schematic Diagram	5-26
5-13	Limiter, Detector, and Single Pole Card A2A8 Assembly Diagram	5-27
5-14	Limiter, Detector, and Single Pole Card A2A8 Schematic Diagram	5-28
5-14A	Detector Switches Assembly, Assembly Diagram	5-28A
5-14B	Detector Switches Assembly, Schematic Diagram	5-28B
5-15	Pole Pair Cards A2A10, A2A11, and A2A12 Assembly Diagram	5-29
5-16	Pole Pair Cards A2A10, A2A11, and A2A12 Schematic Diagram	5-30

LIST OF ILLUSTRATIONS (CONT'D.)

FIGURE		PAGE
5-17	Regulator and Output Amplifier Card A2A15 Assembly Diagram	5-31
5-18	Regulator and Output Amplifier Card A2A15 Schematic Diagram	5-32
5-19	Rear Connector Panel A3 Assembly Diagram	5-33
5-20	Rear Connector Panel A3 Wiring Diagram	5-34
5-21	Power Supply Assembly A4 Assembly Diagram	5-35
5-22	Power Supply Assembly A4 Schematic Diagram (Models 4142-0X-0)	5-36
5-23	Power Supply Assembly A4 Schematic Diagram (Models 4142-0X-8)	5-37

LIST OF TABLES

TABLE NO.		PAGE
1-1	Card File Chassis, A2, Printed-Wiring Card Descriptions	1-7
3-1	Model 4142 PBW Tunable Discriminator Function of Rear-Panel Connectors	3-3
3-2	Function of Front Panel Controls and Indicators	3-5
3-3	Remote Control Programming Instructions	3-11
6-1	Model 4142 Parts List	6-3
6-2	Recommended Spares List	6-57
6-3	Vendor List	6-68
6-4	Customer Provisioning Questionnaire	6-72

(Rev. F)

SECTION 1

GENERAL DESCRIPTION

1.1 INTRODUCTION

This manual contains information describing the EMR Model 4142 Proportional Bandwidth (PBW) Tunable Discriminator. Included in this information are functional and physical descriptions of the unit, specifications, installation and operating instructions, theory of operation, maintenance data, and parts lists.

The Model 4142 discriminator is a precision built, solid-state instrument designed for rack mounting in an FM data processing or checkout system. The discriminator is designed to process analog or pulse type intelligence data contained in an FM subcarrier channel. All operating parameters (center frequency, deviation, data cutoff, response characteristic, and polarity sense) are manually selectable from the front panel or remotely programmable from an external device.

FM subcarrier center frequencies between 100 Hz and 1.5 MHz are selectable to four significant digits. Standard center-frequency deviations of ±7.5%, ±15%, ±20%, ±30%, and ±40% are provided. Tunable output filters provide either constant-delay or constant-amplitude characteristics with data-cutoff frequencies between 4 Hz and 300 kHz.

The discriminator is available in any of six standard design-sequence variations. These are described as follows:

a. Model 4142-01 -- Standard unit containing a three-pole low-pass output filter for a rolloff of 18 db/octave beyond selected cutoff frequency. Tape-speed compensation (TSC) is not included.

b. Model 4142-02 -- Same as Model 4142-01, except TSC is included.

c. Model 4142-03 -- Standard unit containing a five-pole low-pass output filter for a rolloff of 30 db/octave beyond selected cutoff frequency. TSC is not included.

d. Model 4142-04 -- Same as Model 4142-03, except TSC is included.

e. Model 4142-05 -- Standard unit containing a seven-pole low-pass output filter for a rolloff of 42 db/octave beyond selected cutoff frequency. TSC is not included.

(f.) Model 4142-06 -- Same as Model 4142-05, except TSC is included.

1.2 FUNCTIONAL DESCRIPTION

The discriminator (Figure 1-1) extracts a subcarrier channel from an FM multiplex and detects the intelligence data contained in that channel. This intelligence data is presented at the discriminator output in the form of varying analog voltages.

A tunable band-pass input filter (BPIF) at the discriminator input extracts the desired subcarrier frequency from the input FM multiplex, all other subcarrier frequencies are attenuated. The single-channel BPIF output is amplitude limited and pulse shaped by a four-stage high-gain limiter circuit.

The FM detector is a dual-channel circuit employing full-wave pulse-averaging FM detection for determining the amount and direction of the subcarrier modulation. This modulation results in a change in the duty cycle. The detector is driven by complementary phase outputs of an internal limiter circuit and provides a fixed current pulse to the low-pass filter for each half period of the subcarrier waveform. A tape-speed compensation input is fed into the detector through a delay network.

The modulation component is filtered by a tunable three-, five-, or seven-pole low-pass output filter with a selectable constant-delay or constant-amplitude characteristic. An output amplifier at the discriminator output provides drive capability for the signal output to recording or readout devices.

The discriminator is operated in a local mode or remote mode. In the local mode, front-panel controls select all operating parameters for the subcarrier channels. These controls include center-frequency selection, deviation selection, data-cutoff frequency, sense, and output-filter response. In the remote mode, the operating parameters for subcarrier channels are selected by a remote control device, such as an EMR Model 4141 Programmer.

An internal power supply operates from a primary power input to generate all voltages for discriminator operation.

1.3 PHYSICAL DESCRIPTION

The EMR Model 4142 PBW Tunable Discriminator is a self-contained unit, 20-1/4 inches in overall depth, designed for mounting in a standard 19-inch equipment rack. The discriminator is 5-1/4 inches high and 19-inches wide, including the mounting slides. Tilting or nontilting side-mounting slides are provided for mounting the discriminator in the equipment rack.

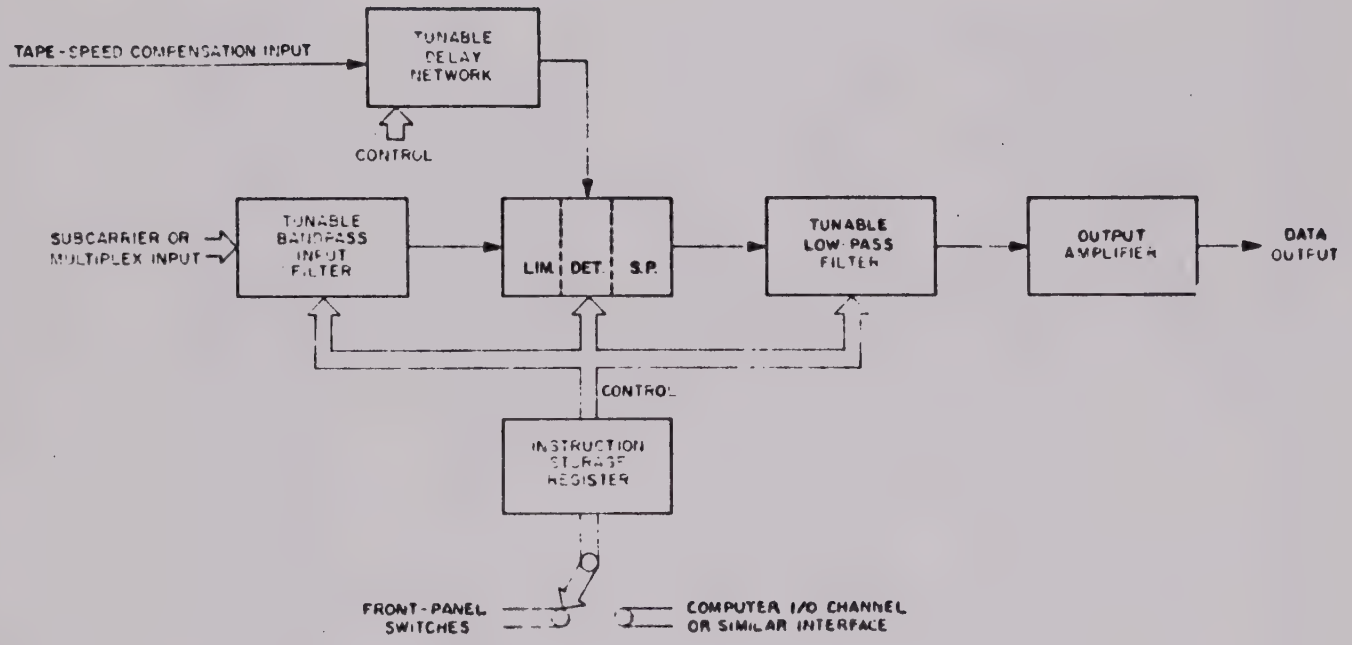

Figure 1-1. Model 4142 PBW Tunable Discriminator Simplified Block Diagram

The discriminator consists of four major assemblies as shown in Figure 1-2. These assemblies are identified by assembly designations A1 through A4 as follows:

A1 -- Front panel/subpanel
A2 -- Card tray
A3 -- Rear panel
A4 -- Power supply

The front panel/subpanel, A1, is a two-segment assembly in which all operating controls, indicators, and monitor jacks are mounted directly to the subpanel and extend through precut openings in the front panel. Also, the front panel/subpanel contains turn-to-lock catches used to secure the discriminator in the mounting rack.

The card-tray assembly, A2, mounts all plug-in printed-circuit cards in the discriminator chassis. Access to this assembly is obtained by releasing the quick-disconnect fasteners in the top cover of the discriminator and removing the cover. Cam-operated ejectors on both ends of the printed-circuit cards facilitate their removal from the card-tray locations. Provisions for up to 15 printed-circuit cards are provided; however, the number of cards will vary depending on the particular discriminator configuration. The maximum card-tray printed-circuit card complement is shown in Figure 1-3 and described in Table 1-1. All wiring to the printed-circuit cards in the card tray is terminated at an associated mating receptacle in the bottom of each card location.

The rear-panel assembly, A3, contains electrical connectors for all input and output connections to the discriminator. A twist-lock power plug is provided for AC power input to the discriminator power supply. A rear-panel five-ampere fuse, connected in series with the AC power input, provides protection from the AC power source. Internal cooling is provided by a blower mounted vertically on the inside of the rear panel. The blower draws cooling air in through a screen on the opposite side of the rear panel and discharges the air through the blower opening.

The power-supply assembly, A4, provides all DC voltages necessary for discriminator operation. The power supply is located adjacent to the card-tray assembly in the middle section of the discriminator. Access to the power supply is gained by releasing the quick-disconnect fasteners in the discriminator top cover and removing the top cover. AC power wiring to the power supply is routed from the twist-lock power plug on the rear panel through a rear-panel fuse and front-panel power switch to the power-supply power components.

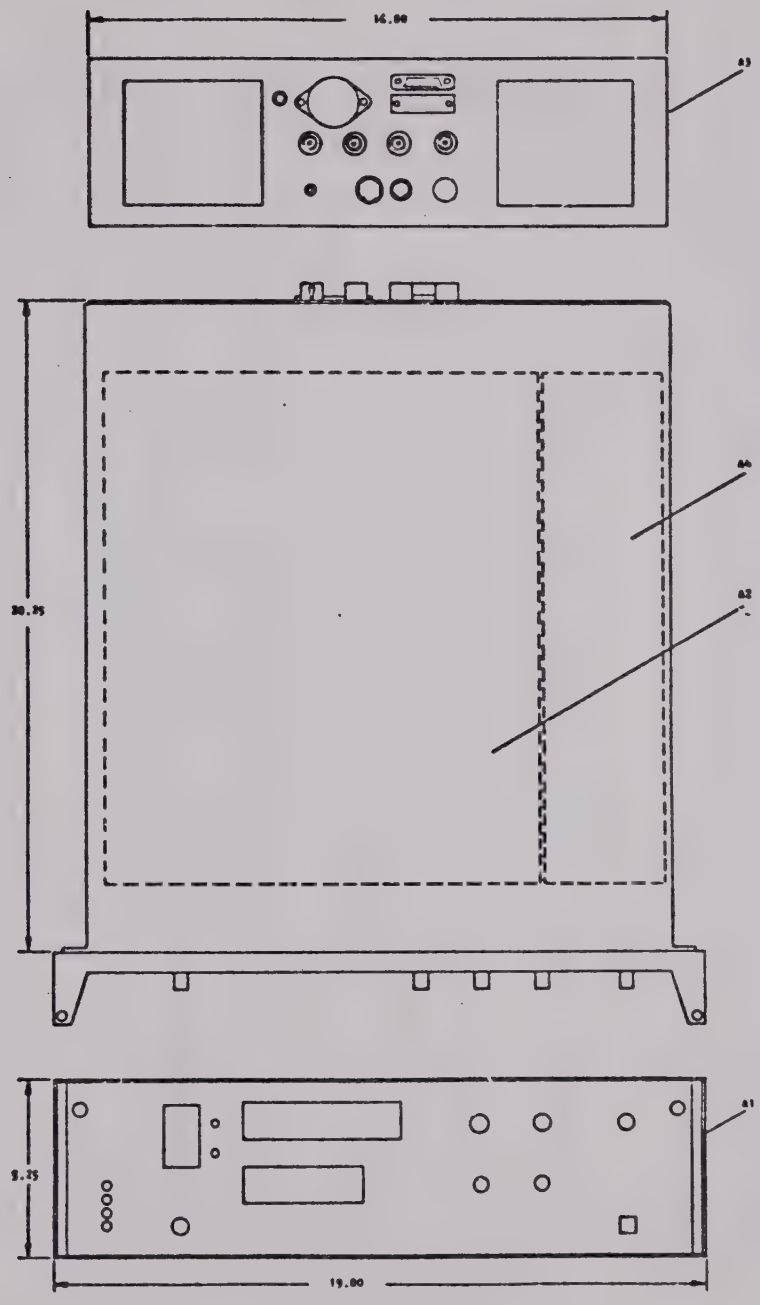

NOTE: Made from Dwg. Control No. 4140-001

Figure 1-2. EMR Model 4142 PBW Tunable Discriminator Major Assemblies

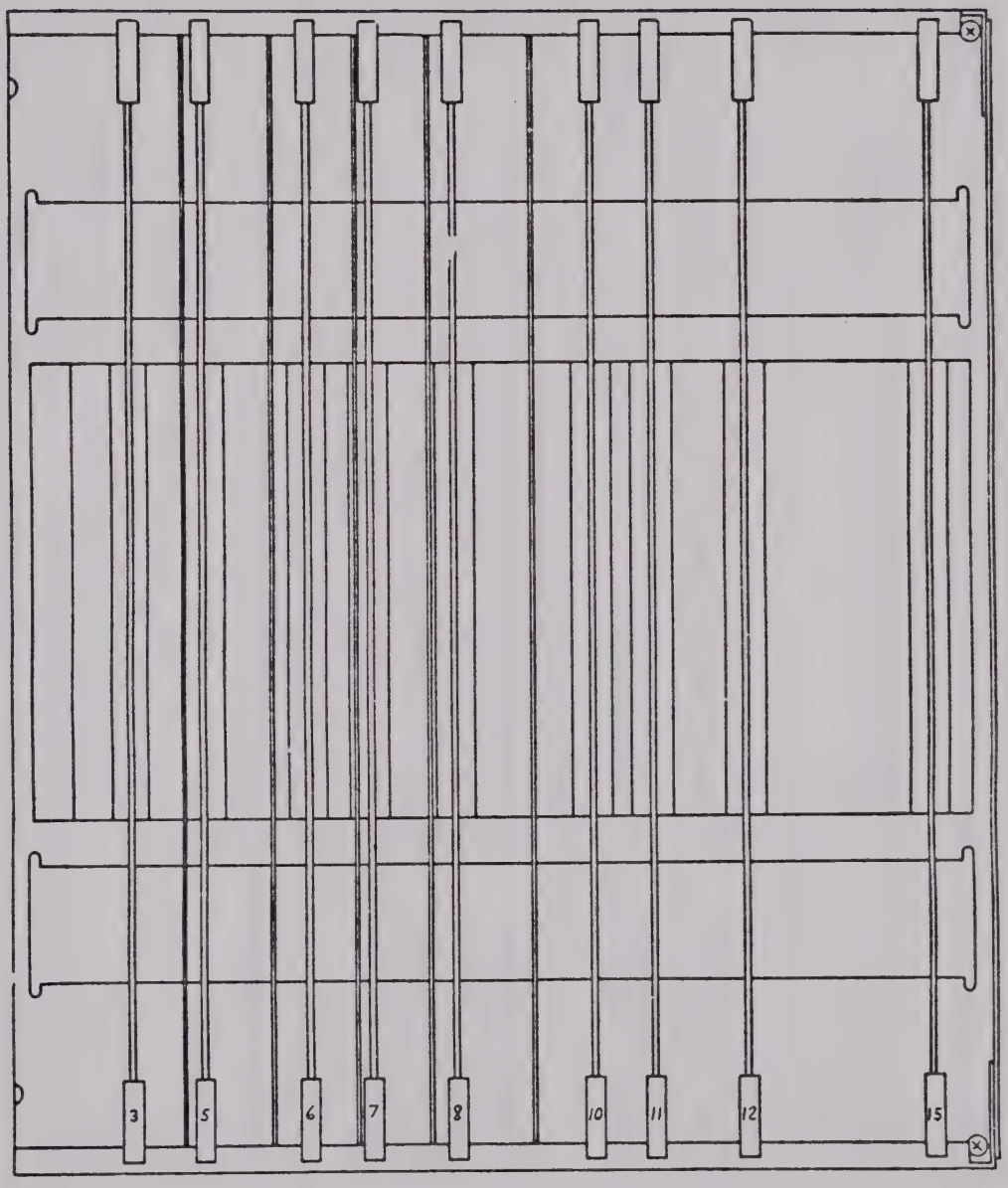

NOTE: Made From EMR Dwg. No. 17676, Rev. A.

Figure 1-3. Card File Assembly A2 Printed-Wiring Card Complement

Table 1-1. Card File Chassis, A2, Printed-Wiring Card Descriptions

DESIG.	NAME	FUNCTION	APPLICATION
A2A1	Extender Card	Used to extend other printed-wiring cards from normal operating positions for test and maintenance.	All models
A2A2	Not used		
A2A3	Input Printed-Wiring Card	Contains components for the input amplifier circuit, isolation amplifiers, and subcarrier amplitude meter circuit.	All models
A2A4	Not used		
A2A5	BPIF No. 1 Printed-Wiring Card	Contains components for first section of the tunable band-pass input filter.	All models
A2A6	BPIF No. 2 Printed-Wiring Card	Contains components for the second section of the tunable band-pass input filter.	All models
A2A7	Tape-Speed Compensation Printed-Wiring Card	Contains components for the tape-speed compensation circuit.	Models 4142-02, -04, and -06
A2A8	Limiter, Detector, and Single Pole Printed-Wiring Card	Contains circuits which demodulate intelligence data from subcarrier input.	All models
A2A9	Not used		
A2A10	Pole Pair Printed-Wiring Card	Contains components of tunable low-pass output filter circuit.	Models 4142-05 and -06

Table 1-1 (Cont'd.). Card File Chassis, A2, Printed-Wiring Card Descriptions

DESIG.	NAME	FUNCTION	APPLICATION
A2A11	Pole Pair Printed-Wiring Card	Contains components of tunable low-pass output filter circuit.	Models 4142-03, -04, -05, and -06
A2A12	Pole Pair Printed-Wiring Card	Contains components for tunable low-pass output filter circuit.	All models
A2A13	Not used		
A2A14	Not used		
A2A15	Regulator and Output Amplifier Printed-Wiring Card	Contains power supply regulators and output amplifier circuits.	All models

SECTION 2

SPECIFICATIONS

2.1 GENERAL

This section outlines the electrical and mechanical specifications for the EMR Model 4142 PBW Tunable Discriminator. Figure 2-1 of this section identifies the ordering information for various configurations of the Model 4142.

2.2 ELECTRICAL SPECIFICATIONS

2.2.1 Input Characteristics

a. Center Frequency: Any subcarrier frequency between 100 Hz and 1.50 MHz is programmable in three significant digits. Tracking over any decade is within ±1% of full bandwidth output.

b. Deviation: Deviations of ±7.5%, ±15%, ±20%, ±30%, and ±40% are standard.

NOTE

The ±30% and ±40% deviations share a 35% BPIF.

c. Data Cutoff Frequencies: Programmable from 04.0 Hz to 300 kHz by either front panel or remote controls.

NOTE

The filter is programmable to 1 MHz; however, performance characteristics stated in this data sheet are specified only to 300 kHz.

d. Attenuation at Selected Cutoff Frequency:

1. With Constant Amplitude (CA) Response:

(a) Down 0.5 db ±0.5 db at programmed frequencies up to 100 kHz.

(b) Down 0.5 db ±1.0 db at programmed frequencies above 100 kHz.

2. With Constant Delay (CD) Response:

(a) Down 3.0 db ±0.5 db at programmed frequencies up to 100 kHz.

(b) Down 3.0 db ±1.0 db at programmed frequencies above 100 kHz.

e. Input Impedance: Greater than 100K ohms shunted by no more than 30 picofarads.

f. Signal Amplitude: Subcarrier levels from 10 millivolts to 5 volts rms (54 db). The maximum composite input signal is 10 volts peak.

g. Amplitude Modulation Rejection: With a deviation ratio of five (5), a 20 db step of input amplitude at center frequency, anywhere within the dynamic input range, causes a peak transient of less than 1% of bandwidth.

h. Rejection of Unwanted Signals: Full scale modulation of an adjacent 7.5% deviation IRIG channel will cause an rms error of not more than 0.2% of bandwidth even when the amplitude of the interferring signal is equal to the desired signal.

2.2.2 Output Characteristics

a. Output Impedance: Not more than 1 ohm for frequencies up to 10 kHz and increasing linearly to a maximum of 10 ohms at 300 kHz.

b. Output Amplitude: Single-ended and referenced to ground. The output polarity is programmable. The output voltage is adjustable between 0 ±0.5 and ±(10.5 ±0.3) volts for full scale deviation with front panel control. Output voltage is limited to approximately ±13 volts peak.

c. Current: Peak current limited; 100 milliamperes minimum, 140 milliamperes maximum from DC to 300 kHz.

d. Loading: Any capacitive load up to 0.01 microfarad provided peak current capability is not exceeded. A short circuit on the output will not damage the unit.

e. Total Harmonic Distortion: For deviation ratios of 5 or greater, the harmonic distortion for bandedge-to-bandedge modulation of any IRIG channel is less than 1.0% for any modulation frequency up to the channel cutoff frequency.

f. RMS Output Noise: Not greater than 0.1% of full bandwidth at a deviation ratio of 5 or greater when using a seven-pole, CA, low-pass output filter. Not greater than 0.3% of full bandwidth at a deviation ratio of 2 or greater when using a seven-pole, CA, low-pass output filter.

g. Nonlinearity: Not greater than ±0.05% best straight line for all deviations and center frequencies equal to or less than 500 kHz. Not greater than ±0.15% for deviations and center frequencies above 500 kHz.

h. Output Zero Stability: Zero drift not greater than ±0.15% of full bandwidth in a 15-hour period after a 30-minute warmup at a constant (±3°C) ambient temperature. Drift not greater than ±0.5% of full bandwidth output throughout the operating temperature range of +10° to +50°C.

i. Deviation Sensitivity Stability: Not more than ±0.05% of full bandwidth variation (±10 mv) in a 15-hour period after a 30-minute warmup at constant (±3°C) ambient temperature.

j. Data Response: Constant amplitude (CA) or constant delay (CD) output response selectable by either front panel controls or remote programming. Cutoff characteristic asymptotically approaches 18, 30, or 42 db/octave beyond cutoff, depending upon filter type (three-, five-, or seven-pole).

k. Line-Voltage Sensitivity: A 10-volt change in line voltage anywhere between 105 and 132 volts causes an error of not more than 0.1% of bandwidth at the discriminator output.

l. Tape-Speed Compensation - Models 4142-02, -04, and -06: For any IRIG subcarrier, the wow-and-flutter improvement ratio is 26 db for tape-speed variations as large as ±3% up to the channel cutoff frequency at a deviation ratio of 5. For all center frequencies above 200 KHz and for any ±20%, ±30%, and ±40% deviations, tape-speed improvement will

be a minimum 18 db. An internal delay network is automatically controlled by the center frequency and deviation settings to match the band-pass filter delay. The TSC input normally accepts a positive sense with a sensitivity of 10 volts peak for ±7.5% deviation. Negative sense may be obtained by internal jumpers.

2.3 MECHANICAL SPECIFICATIONS

a. Panel Size: 5-1/4 inches (13.3 cm) high by 19 inches (48.2 cm) wide.

b. Depth: 20 inches (50.8 cm) excluding projections from front panel.

c. Weight: Net, 55 pounds (25 kg); shipping, 100 pounds (45.4 kg).

d. Mounting: May be equipped for slide mounting in a standard 19-inch EIA-type equipment rack. (Refer to Figure 2-1 for various slide mounting configurations.)

e. Paint Finish: Various semigloss baking enamel colors and letter combinations are available. (Refer to Figure 2-1 for color information.)

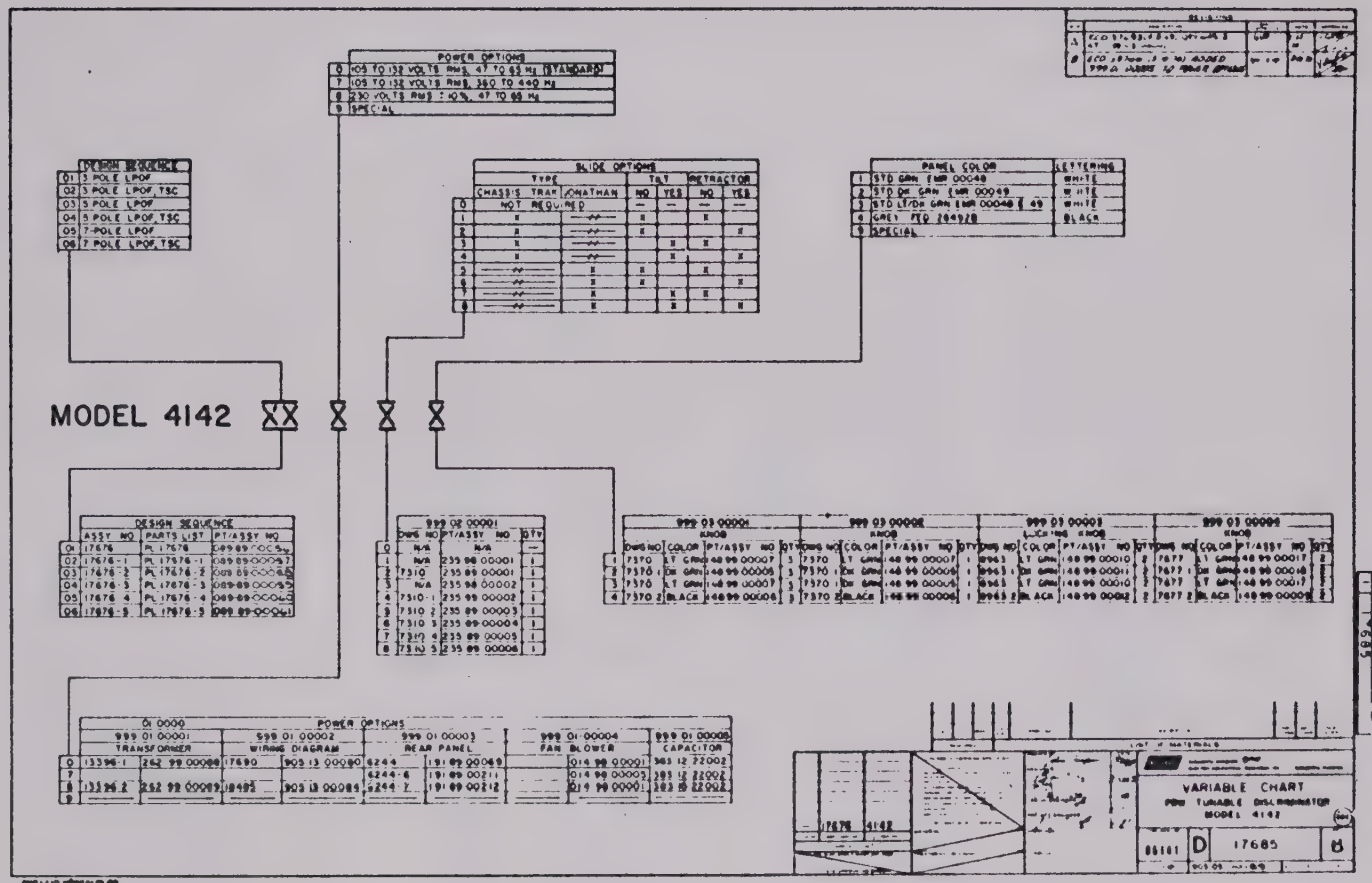

Figure 2-1. Variable Chart

SECTION 3

INSTALLATION AND OPERATION

3.1 INSTALLATION

The EMR Model 4142 PBW Tunable Discriminator is shipped completely assembled and ready for installation. The unit is calibrated and adjusted prior to shipment, and all plug-in printed-wiring cards inserted into the appropriate receptacles and all covers are installed. The unit should be inspected immediately on its arrival and notice given to EMR-Telemetry of any claim that the product does not conform with the terms of the order.

The Model 4142 may be ordered with or without mounting slides. (Refer to paragraph 2.3 (d) for the various mounting configurations.) Units without slide mounts may be bolted directly to a standard 19-inch equipment rack with the hardware provided for that purpose. For installation of a Model 4142 with slide mounts, remove the slides from the discriminator after unpacking the unit and mount the slides to the internal frame of the equipment rack. Mounting hardware for this installation is supplied with the discriminator. Insert the discriminator into the slides until the unit is firmly seated. Turn-to-lock fasteners located on either side of the discriminator front panel secure the unit in the rack.

The discriminator may be extended from the equipment rack for servicing by loosening the front panel turn-to-lock fasteners and pulling the unit straight out. Pushbutton stop latches, located on the outside surfaces of both slides, hold the unit at the maximum extension. At this point, the discriminator may be removed from the rack by depressing the pushbutton stop latches and pulling the unit straight out.

The external electrical connections to the discriminator are terminated at connectors on the rear panel. These connectors and other rear-panel components are illustrated in Figure 3-1 and described in Table 3-1.

3.2 OPERATION

3.2.1 Local Mode of Operation

In the local mode of operation, the operating parameters for the Model 4142 are selected by front-panel controls. After energizing the unit and selecting the desired operating parameters, the discriminator is fully automatic until a new set of parameters are required. Front panel indicators and test jacks are provided for monitoring discriminator performance. The front panel controls, indicators, and test jacks are identified in Figure 3-2 and described functionally in Table 3-2. Preoperational adjustment procedures and typical operational setup procedures are outlined in the following paragraphs.

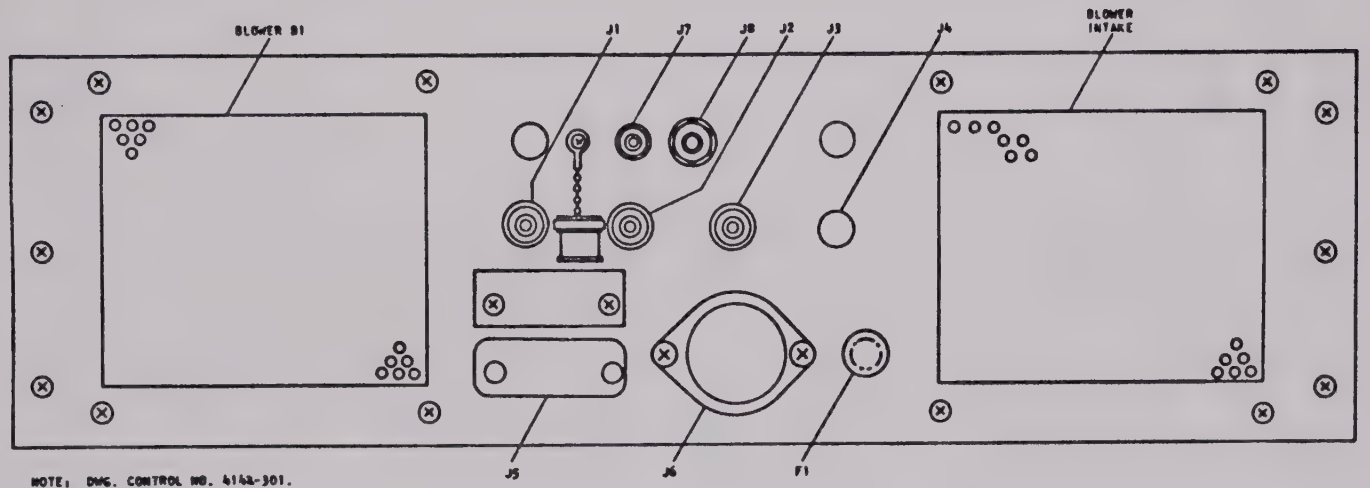

Figure 3-1. Model 4142 PBW Tunable Discriminator Rear Panel Configuration

Table 3-1. Model 4142 PBW Tunable Discriminator
Function of Rear-Panel Connectors (Ref. Figure 3-1)

DESIG.	NAME	TYPE	FUNCTION
A3J1	OUTPUT	BNC	Discriminator data output.
A3J2	TSC	BNC	Tape-speed-compensation input.
A3J3	INPUT	BNC	FM subcarrier multiplex input.
A3J4	------	----	Not used.
A3J5	REMOTE CONTROL	Amphenol	Used for remotely programming discriminator operating parameters. For pin-function listing and remote-programming instructions, refer to paragraph 3.2.2.
A3J6	POWER	Hubbell Twist-lock	AC power input connection to discriminator power supply.
A3J7	CASE GND	Binding Post	Chassis ground.
A3J8	SIG GND	Binding Post	Signal ground

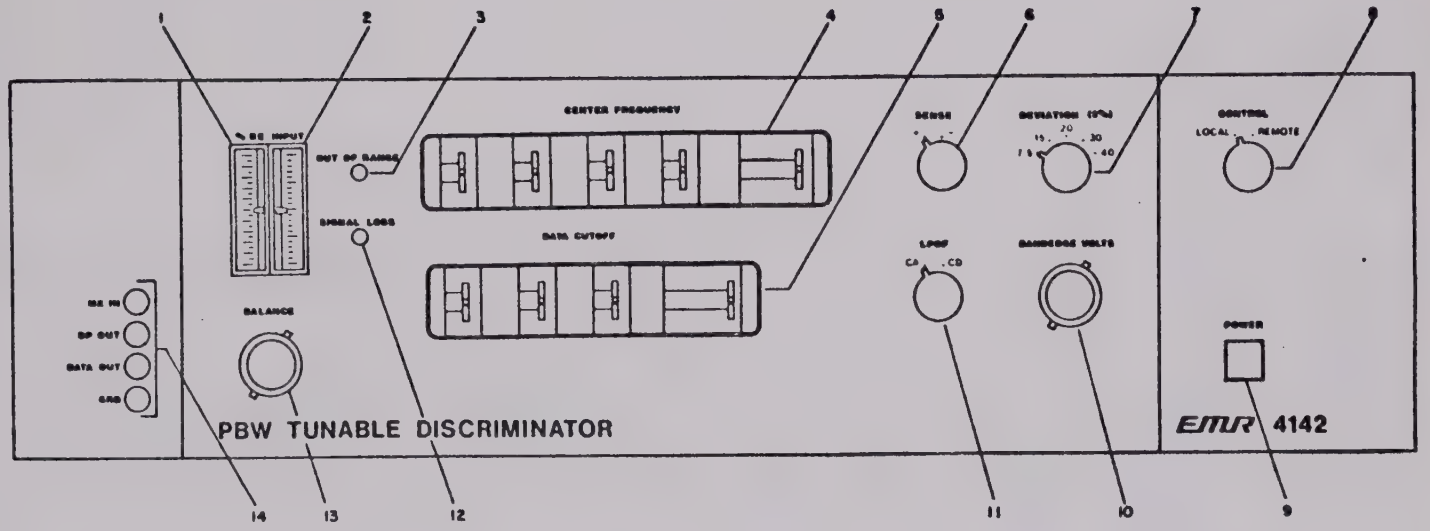

DRAWING CONTROL NO. 4142-302

Figure 3-2. Front Panel Assembly (A1) Operating Controls, Indicators, and Test Points

Table 3-2. Function of Front Panel Controls and Indicators
(Ref. Figure 3-2)

REF. NO.	NAME	DESIG-NATION	FUNCTION
1	% BE meter	M2	Display percentage of subcarrier signal deviation from center frequency to either bandedge.
2	INPUT meter	M1	Display amplitude of selected subcarrier input signal. A nonlinear meter scale eliminates range switching.
3	OUT-OF-RANGE indicator	DS5	The lamp lights when the incoming subcarrier frequency is sufficiently above or below the prescribed bandedge for the selected center frequency and deviation. The output is clamped to any desired voltage between ±11 volts.
4	CENTER FREQUENCY switches	S3 thru S7, DS1, DS9, and DS10	Four thumbwheel switches (S4 through S7) provide for selection of subcarrier center frequencies of 100 Hz to 1500 kHz. The most significant digit is normaliy set to zero and is only used for frequencies of 1000.kHz and higher. The fifth thumbwheel switch, S3, provides for selection, and illumination, of the proper decimal point location to provide a direct readout.
5	DATA CUTOFF switches and decimal point indicators	S9 thru S12, and DS2, DS3, and DS4	Three thumbwheel switches provide for selection of a data cutoff frequency of from 4 Hz to 300 kHz. A fourth thumbwheel switch provides for selection, and illumination, of the proper decimal point location.
6	SENSE switch	S14	Provides selection of positive or negative deviation sense.

Table 3-2 (Cont'd.). Function of Front Panel Controls and Indicators (Ref. Figure 3-2)

REF. NO.	NAME	DESIG-NATION	FUNCTION
7	DEVIATION (±%) switch	S2	Provides for selection of one of five deviation limits (±7.5%, ±15%, ±20%, ±30%, or ±40%) for selected center frequency signal.
8	CONTROL LOCAL/ REMOTE switch	S1	Provides for controlling operating parameters of the Model 4142 from either the front panel of the unit (LOCAL) or from an external device (REMOTE) by grounding appropriate input leads at a rear panel connector.
9	POWER pushbutton switch	S13	Controls application of primary power to the unit. When power is applied, POWER switch is illuminated.
10	BANDEDGE VOLTS potentiometer	R1	Provides for adjustment of data output voltage from ±0.1 to ±10 volts for full bandedge-to-bandedge deviation.
11	LPOF CA/CD switch	S8	Provides for selection of either constant amplitude (CA) or constant delay (CD) output filter response characteristics.
12	SIGNAL LOSS lamp	DS8	When the input signal amplitude is less than a predetermined level, a front-panel lamp lights and the output is clamped to any desired voltage between ±11 volts. The clamp level is normally preset for zero volts at the factory. Signal-loss level is adjustable up to at least 50 mv rms and is normally adjusted at the factory to 10 mv rms at band center. The signal-loss clamp circuit has slow attack and fast release times to provide optimum performance during tape dropout or rapid signal fading.

Table 3-2 (Cont'd.). Function of Front Panel Controls and Indicators (Ref. Figure 3-2)

REF. NO.	NAME	DESIG-NATION	FUNCTION
13	BALANCE potentiometer	R2	Provides for adjusting discriminator data output to a zero volt level with a center frequency subcarrier input signal.
14	Test jacks:		
	MX IN	TP4	Multiplex input.
	BP OUT	TP3	Subcarrier signal at output of the band-pass filter.
	DATA OUT	TP2	Discriminator data output.
	GRD	TP1	Ground.

3.2.1.1 Initial Checks and Adjustments

Normally, the only adjustment required prior to initial operation of the Model 4142 is adjustment of the front panel BANDEDGE VOLTS control. The bandedge voltage adjustment need be made only once and will not change with the selection of another subcarrier channel or selection of another deviation-sensitivity setting. The balance and bandedge voltage adjustments are accomplished as follows:

a. Depress the front panel POWER switch A1S13 to apply power to the Model 4142 (POWER indicator should be lit).

NOTE

Allow a 30-minute warmup period before proceeding.

b. Connect an external signal generator (Hewlett-Packard 200CD or equivalent) tuned for an output signal frequency of 100 kHz to the rear panel INPUT connector, A3J3, and connect the grounding cap to TSC connector A3J2.

c. Position the front panel controls as follows:

Control	Position
CENTER FREQUENCY switches A1S3 through A1S7	0100. kHz
CONTROL switch A1S1	LOCAL

d. Connect a Fluke Model 825A DC voltmeter to DATA OUT test jack TP2 on the front panel. The DC voltmeter should indicate 0 ±200 millivolts and the front panel % BE meter, A1M2, should indicate zero deviation.

NOTE

If the center frequency balance indication is abnormal, perform the checkout and adjustment procedures outlined in Section 5.

e. Position the front panel DEVIATION (±%) switch A1S2 to the desired deviation range (7.5, 15, 20, 30, or 40).

f. Tune the external signal generator so that the input test signal represents upper bandedge deviation. For example, if the deviation range of ±20% is selected, tune the signal generator for 120 kHz.

g. Connect the DC voltmeter to DATA OUT test jack TP2 on the front panel and adjust BANDEDGE VOLTS potentiometer A1R1 for the desired bandedge voltage indication (0.1 to 10.0 volts).

3.2.1.2 Typical Operational Setup Procedure

The following procedure is to be used as a guide for setting the operating parameters for the Model 4142:

a. Apply power to the Model 4142 and allow a 30-minute warmup period.

b. Connect the FM subcarrier multiplex input to the discriminator rear-panel INPUT jack A3J3.

c. Position the front-panel SENSE switch S14 to negative (–) or positive (+) as required. In the (–) position, an increase in signal-input frequency will result in a negative-going discriminator output voltage. In the (+) position, an increase in signal-input frequency will result in a positive-going discriminator output voltage.

d. Position the front-panel CONTROL switch S1 to LOCAL.

e. Position the front-panel DEVIATION (±%) switch S2 to the required position.

f. Position the front-panel CENTER FREQUENCY thumbwheel switches to the significant digits of the selected center frequency. (Always use MSD-1 position for frequency settings up to 999 kHz. Use MSD position above 999 kHz.)

g. Position the front-panel DATA CUTOFF thumbwheel switches to the significant digits of the selected data-cutoff frequency. (Always use MSD position for frequency settings of 10 Hz and above. Use MSD-1 position below 10 Hz.)

h. Position the front-panel LPOF switch S8 to CA or CD as required. (The CA position is recommended for analog-type data outputs and the CD position is recommended for pulse-type data outputs.)

3.2.2 Remote Mode of Operation

In the remote mode of operation, the discriminator operating parameters are selected by applying external input signals to control lines at the rear-panel REMOTE CONTROL connector A3J5. These input signals are in the form of ground level (0-volt) inputs at the appropriate pins to select each operating point.

To place the discriminator under remote control, position the front-panel CONTROL switch, S1, to REMOTE. This disables all local controls except the POWER pushbutton switch, the BANDEDGE VOLTS control, and the BALANCE control. The bandedge voltage is adjusted while under local control, and when switching to remote control, this setting will remain constant throughout the entire operating range of the discriminator.

The operating points and program instructions are contained in Table 3-3. The rear-panel REMOTE CONTROL connector and pin-location diagram is shown in Figure 3-3. Table 3-3 identifies pin functions.

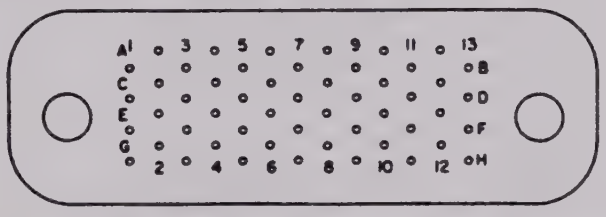

Figure 3-3. REMOTE CONTROL Connector A3J5 Pin-Location Diagram

3.2.3 Tape-Speed Compensation (TSC) System

The discriminator may be used in a tape-speed compensation (TSC) system connected as is shown in Figure 3-4. This system requires a reference discriminator and a signal delay unit to be used in conjunction with the Model 4142 Discriminator.

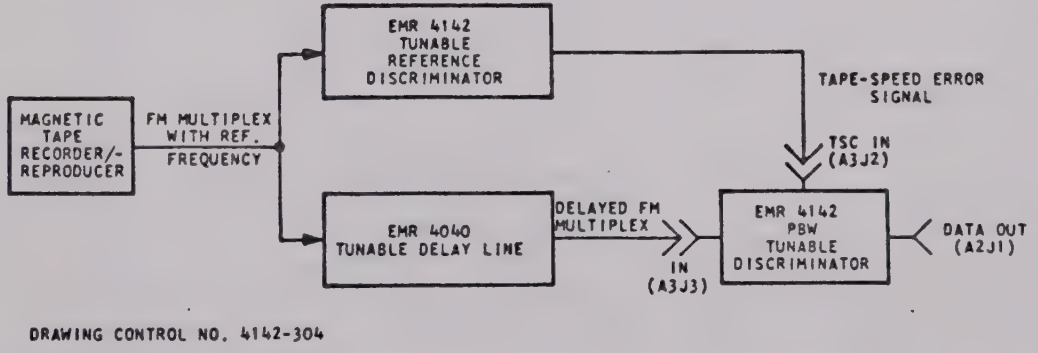

Figure 3-4. Tape-Speed Compensation System Block Diagram

Table 3-3. Remote Control Programming Instructions
(Ref. Figure 3-3)

Operating Parameter To Be Selected	Program Instruction (Input At Rear Panel REMOTE CONTROL Connector A3J5)
Center Frequency Digits	
Most Significant Digit Digit 1 (MSD)	
1	Ground Pin F13
0	Pin F13 Open
Digit 2	
0	Pins A6, B5, A8, and B7 Open
1	Ground Pin B7
2	Ground Pin A8
3	Ground Pins A8 and B7
4	Ground Pin B5
5	Ground Pins B5 and B7
6	Ground Pins B5 and A8
7	Ground Pins B5, A8, and B7
8	Ground Pin A6
9	Ground Pins A6 and B7
Digit 3	
0	Pins A10, B9, A12, and B11 Open
1	Ground Pin B11
2	Ground Pin A12
3	Ground Pins A12 and B11
4	Ground Pin B9
5	Ground Pins B9 and B11
6	Ground Pins B9 and A12
7	Ground Pins B9, A12, and B11
8	Ground Pin A10
9	Ground Pins A10 and B11
Digit 4	
0	Pins D13, B13, C2, and D1 Open
1	Ground Pin D1
2	Ground Pin C2
3	Ground Pins C2 and D1
4	Ground Pin B13
5	Ground Pins B13 and D1
6	Ground Pins B13 and C2
7	Ground Pins B13, C2, and D1
8	Ground Pin D13
9	Ground Pins D13 and D1

Table 3-3 (Cont'd.). Remote Control Programming Instructions
(Ref. Figure 3-3)

Operating Parameter To Be Selected	Program Instruction (Input At Rear Panel REMOTE CONTROL Connector A3J5)
Center Frequency Digits (Cont'd.)	
Multiplier	
100.0 kHz	Ground Pin B3
10.0 kHz	Ground Pin A4
1.0 kHz	Ground Pin B1
100 Hz	Ground Pin A2
Deviation Range	
±7.5%	Ground Pin C4
±15%	Ground Pin D3
±20%	Ground Pin E4
±30%	Ground Pin C6
±40%	Ground Pin D5
Data Cutoff Digits	
MSD = 1	Ground Pin D9
2	Ground Pin C10
3	Ground Pins C10 and D9
4	Ground Pin D7
5	Ground Pins D7 and D9
6	Ground Pins D7 and C10
7	Ground Pins D7, C10, and D9
8	Ground Pin C8
9	Ground Pins C8 and D9
0	Pins C8, D7, C10, and D9 Open
Digit 2 = 1	Ground Pin F1
2	Ground Pin E2
3	Ground Pins E2 and F1
4	Ground Pin D11
5	Ground Pins D11 and F1
6	Ground Pins D11 and E2
7	Ground Pins D11, E2, and F1
8	Ground Pin C12
9	Ground Pins C12 and F1
0	Pins C12, D11, E2, and F1
LSD = 0 through 4	Ground Pin F3
5 through 9	Pin F3 Open

Table 3-3 (Cont'd.). Remote Control Programming Instructions
(Ref. Figure 3-3)

Operating Parameter To Be Selected	Program Instruction (Input At Rear Panel REMOTE CONTROL Connector A3J5)
Data Cutoff Multiplier	
1 Hz (XX.X)	Ground Pin F9
100 Hz (XX.X)	Ground Pin E12
.1 kHz (XXX.)	Ground Pin H13
10 kHz (X.XX)	Ground Pin F11
100 kHz (XXX.)	Ground Pin E10
Response Characteristic	
CA	Ground Pin F7
CD	Ground Pin E8
	NOTE Pins G2 and H1 are signal ground.

In this system, the prerecorded FM multiplex is applied to a reference discriminator and a signal delay unit. The reference discriminator accepts the reference frequency from the FM multiplex and detects any reference frequency modulation incurred during the recording or playback process. Any reference-frequency modulation results in a tape-speed error signal at the reference discriminator output.

The signal delay unit delays the FM multiplex an amount equal to the delay in the reference discriminator. The delayed FM multiplex and the tape-speed error signal are then applied to the Model 4142 via connectors A3J3 and A3J2, respectively. A band-pass input filter in the Model 4142 extracts the subcarrier channel from the FM multiplex and an FM detector detects the data in that channel.

If tape-speed variations have occurred, these variations result in erroneous subcarrier modulations and would be detected as data in that subcarrier channel. However, the tape-speed error signal affects tuning of the discriminator in such a way as to compensate for the erroneous modulations and only the true subcarrier channel data is applied to the Model 4142 data output.

If TSC is not used, the TSC input A3J2 must be shorted to ground. A shorting cap is attached to the discriminator rear panel for this purpose.

A positive or negative sense reference discriminator may be used for the 4142. A jumper is included on the TSC card to select the appropriate sense (see paragraph 4.3.4). When a positive sense reference discriminator is used, the E1 to E2 connection is made. Since the EMR reference discriminators are normally positive sense, the E1 to E2 connection is normally made. When a negative sense reference discriminator is to be used, the jumper must be moved to connect E1 and E3.

SECTION 4

THEORY OF OPERATION

4.1 GENERAL

This section contains the functional theory of operation for the Model 4142 Proportional Bandwidth Tunable Discriminator. The theory discussions are presented at two levels. A general theory of operation, referenced to the overall system block diagram shown in Figure 4-1, is provided in paragraph 4.2. Detailed descriptions of the functional circuit groups identified on Figure 4-1 are provided in paragraph 4.3. The assembly and schematic diagrams for the Model 4142 are provided in Section 5 of this manual for reference and maintenance purposes.

4.2 GENERAL THEORY OF OPERATION

The Model 4142 accepts an FM multiplex of subcarrier channels in the input frequency range of 100 Hz and 1500.kHz, extracts a selected channel from the multiplex, demodulates the intelligence data contained in the selected channel by pulse-averaging detection, and presents the intelligence data at the discriminator output in the form of a varying analog voltage.

As shown in Figure 4-1, the Model 4142 is composed of the following six functional circuit groups: programming control, input control and band-pass, FM detection, tape-speed compensation, LPOF and output amplifier, and DC power circuits. The programming control circuit group is composed of front panel CONTROL/LOCAL-REMOTE switch A1S1, CENTER FREQUENCY switches A1S3 through A1S7, DEVIATION (±%) switch A1S2, LPOF switch A1S8, DATA CUTOFF switches A1S9 through A1S12, and SENSE switch A1S14. The function of this circuit group is to provide the means for establishing the operating parameters of the Model 4142 (center frequency, deviation, polarity sense, output response characteristic, and data cutoff frequency) from either local or remote sources.

The FM multiplex of subcarrier signals is applied to the input control and band-pass circuit group which is composed of input card A2A3, BPIF section 1 card A2A5, BPIF section 2 card A2A6, and front panel INPUT meter A1M1, SIGNAL LOSS indicator A1DS7 and OUT-OF-RANGE indicator A1DS5. The input card contains amplification stages for providing the proper terminating impedance for the input multiplex and for isolation between sections of the band-pass input filter, and high frequency feedback amplifiers between poles on each section. Card A2A3 also contains a zero-signal detector and an out-of-range detector. The zero-signal detector senses the input multiplex for conditions where the signal amplitude is sufficiently low (nominally less than 10 millivolts) as to possibly result in erroneous data at the discriminator output. The out-of-range detector senses for conditions in which the incoming subcarrier signal

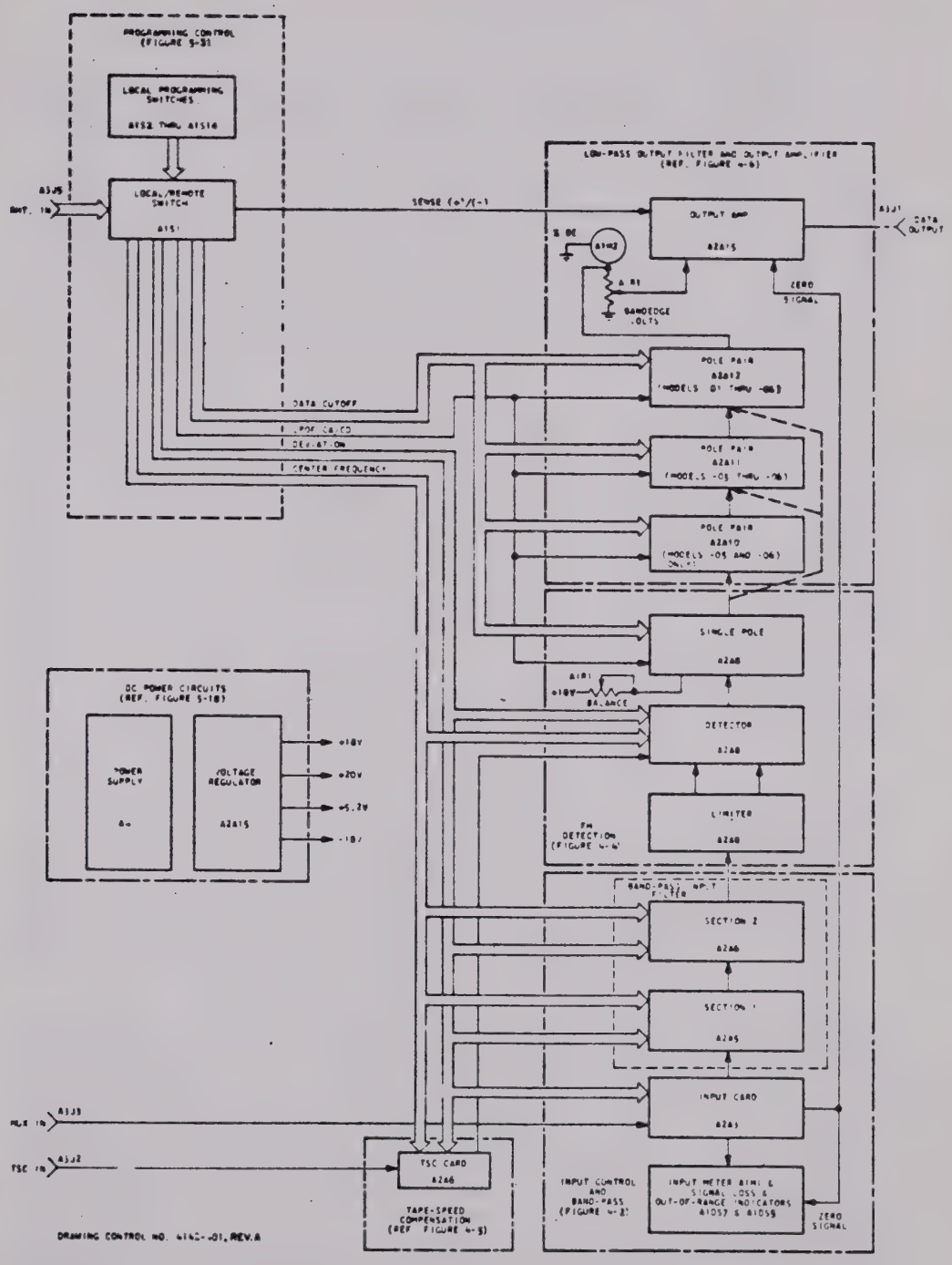

Figure 4-1. Model 4142 Functional Block Diagram

is operating at a frequency above or below the bandedge frequency of the programmed subcarrier channel. Detection of either of these conditions results in the discriminator output being clamped at a predetermined level.

In addition to the isolation amplifiers on card A2A3, the band-pass input filter contains two individual sections. The first BPIF section, card A2A5, contains two poles which operate as a band-pass filter. The second BPIF section, card A2A6, also contains two poles but operates as a low-pass filter. The two sections are connected in series to obtain the desired composite response. The programmed center frequency and deviation parameters allow appropriate relays in the BPIF to be energized for tuning the required BPIF frequency response.

The selected subcarrier channel output is applied to the FM detection circuit group consisting of a four-stage high gain limiter, a pulse-averaging FM detector, and a single-pole circuit, each of which are located on card A2A8. The primary function of the limiter is to convert the subcarrier signal to a substantially constant-amplitude square wave which is applied in complementary form to the detector. The FM detector used in the Model 4142 is a current operating device in which the output current is proportional to subcarrier signal deviation. The single-pole circuit, although being the first stage of the low-pass output filter, is discussed as part of the FM detection group since it is also a current referenced circuit. This circuit consists of an RC network tunable for a specific data cutoff frequency and two tunable amplifier stages. The output of the single-pole circuit, a voltage oriented signal, is applied to the low-pass output filter circuit. Front panel BALANCE potentiometer A1R2 provides for calibrating the discriminator output for zero volts when the subcarrier input is operating at center frequency.

In discriminator units containing tape-speed compensation capabilities (Models 4142-02, -04, and -06), a tape-speed error signal received from a remote device is applied to a tunable delay network on TSC card A2A6. The tape-speed error signal is delayed an amount equal to the delay encountered by the subcarrier input processed through the BPIF. The error signal is then applied to the detector circuit to compensate for tape-speed variations on the input signal.

One of three low-pass output filter configurations (three-pole, five-pole, and seven-pole) is available in Model 4142 discriminators for rolloff characteristics of 18 db, 30 db, or 42 db per octive, respectively. The LPOF, which passes only the intelligence data in the selected subcarrier channel, is program tunable for a data cutoff frequency of 4.0 Hz to 300 kHz. The output filter response characteristic (constant amplitude or constant delay) is also programmable. The LPOF output is coupled through BANDEDGE VOLTS control A1R1 to the output amplifier circuit on card A2A15 and is also applied to the front panel % BE meter, A1M2, which provides a relative indication of the magnitude and direction of the subcarrier deviation. The output amplifier provides the current and voltage drive capability for output recording and readout devices. The discriminator output voltage, representing bandedge of a selected subcarrier

channel, is adjustable by means of the BANDEDGE VOLTS control. The output from the output amplifier circuit is applied to the rear panel OUTPUT connector, A3J1, and to the front panel DATA OUT test jack, A1TP2.

The DC power circuits group provides the primary DC operating voltages for the Model 4142 discriminator. The DC power circuits consist of power supply assembly A4; the +18 volt, +20 volt, +5.2 volt, and −18 volt regulators located on card A2J15.

4.3 DETAILED THEORY OF OPERATION

The following paragraphs provide detailed descriptions of the functional circuit groups identified in paragraph 4.2.

4.3.1 Programming Control (Ref. Figure 5-3)

The programming control function is composed of the front panel control switches which initiate and/or distribute the command signals that establish the operating parameters for the Model 4142. The front panel switches which comprise the programming control function consist of CONTROL LOCAL/REMOTE switch A1S1, DEVIATION (±%) switch A1S2, CENTER FREQUENCY switches A1S3 through A1S7, LPOF switch A1S8, DATA CUTOFF switches A1S9 through A1S12, and SENSE switch A1S14. The CONTROL switch determines if the Model 4142 is under control of the front panel switches or a remote device such as the EMR Model 4141 Programmer. With the CONTROL switch in the LOCAL position, relay control signals (ground level DC returns or "opens"), as established by the positioning of switches A1S2 through A1S12 and A1S14, are routed through contacts of the CONTROL switch to applicable functional circuit groups. In the REMOTE position, the relay control signals are initiated by an external device and routed to the appropriate functional circuits. The purpose of individual control switches is defined in Table 3-2.

4.3.2 Input Control Function (Ref. Figure 4-2)

The input control circuit group is composed of all circuits contained on input card A2A3 and the band-pass input filter (BPIF) consisting of cards A2A5 and A2A6. The function of this circuit group is to extract a selected subcarrier channel from an input multiplex of input signals. In addition to the band-pass function, this circuit group also provides circuits for zero signal detection, front panel INPUT meter control, and out-of-range detection. The functional operation of each circuit is provided in the following paragraphs.

4.3.2.1 Band-Pass Input Filter

The BPIF is a two-section active filter designed to extract a single channel from an FM multiplex of subcarrier channels. The FM multiplex is applied through rear panel connector A3J3 to an input amplifer (Q1 through Q4) on the input card A2A3. Input impedance is greater than 100K ohms resistive for all

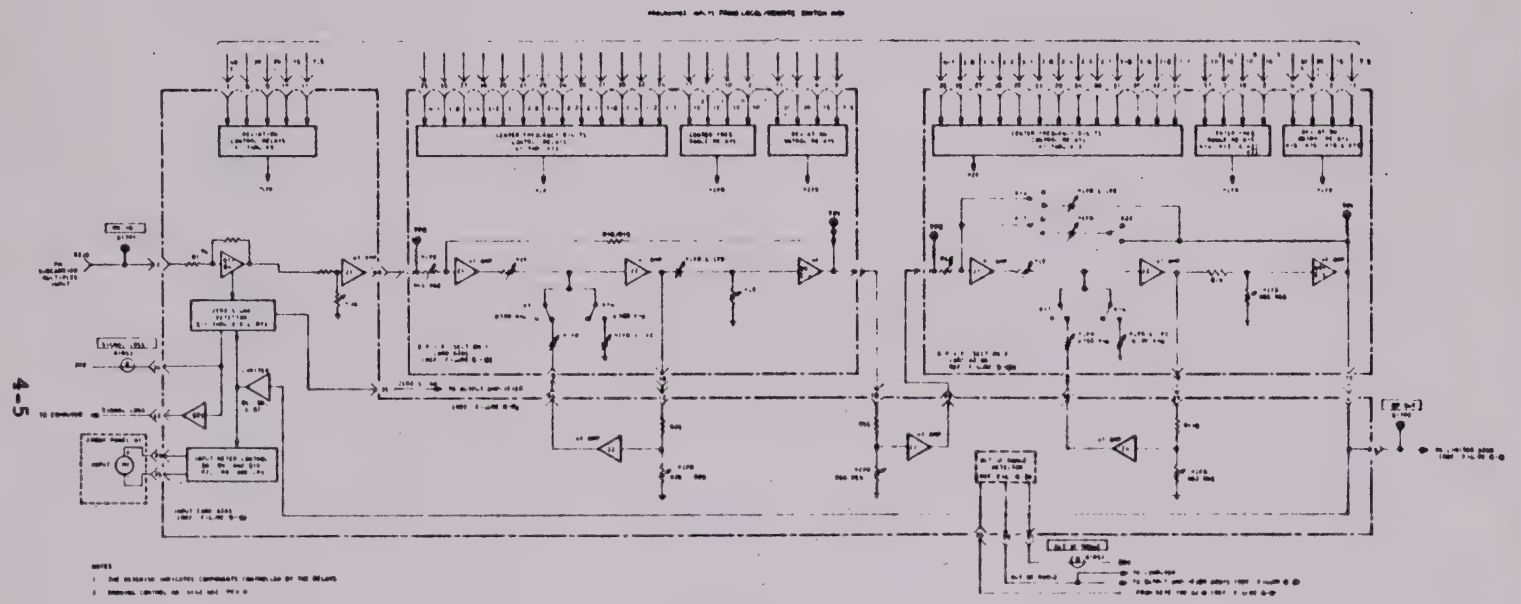

Figure 4-2. Input Control and BPIF Circuit Group Functional Block Diagram

input signals within the frequency range of the discriminator. The FM multiplex output from amplifier Q1-Q4 is coupled through jumpered contacts on relay socket XK1 and an isolation amplifier (Z1) to the first section of the BPIF.

NOTE

Relay K1 is not installed.

The first BPIF section (card A2A5) contains two poles and operates essentially as a band-pass section. The second BPIF section (card A2A6) also contains two poles and operates as a low-pass section. These two sections, connected in series, form a band-pass filter configuration tuned to pass only the assigned frequencies of the selected subcarrier channel. The two BPIF sections are isolated by an amplifier on input card A2A3, thus eliminating any interaction between the two sections. Center frequency and bandwidth adjustments in each section are made by energizing relays in the BPIF which select components necessary to provide the proper BPIF frequency response. These relays are controlled by either the front-panel center frequency and deviation switches or remote-control inputs from an external source. The front-panel CONTROL switch provides the means of switching from local control to remote control.

Also included within the BPIF sections are isolation amplifiers. These are high-input-impedance and low-output-impedance unity-gain amplifiers which isolate portions of the feedback networks, thereby eliminating interaction between response-determining components in the BPIF. The resultant subcarrier channel passed by the BPIF is routed through a second set of normally closed contacts of relay A2A3K1 and pin 5 of input card A2A3 to the FM detection circuit group.

4.3.2.2 INPUT Meter Control and Zero Signal Detector

The subcarrier channel output signal at pin 5 of input card A2A3 is also applied to a two-stage high-gain limiter/amplifier circuit on the input card. This circuit is composed of transistor stages Q5 through Q7 and associated discrete components (see Figure 5-5) and is used to convert the selected subcarrier channel sine wave signal to a substantially constant amplitude square wave. Each of the limiter stages consists of a diode clamping network and an emitter-follower and the two stages are separated by a high gain amplifier. The clamping diodes limit the voltage swing at the input to amplification stages, thus preventing a saturated condition. AC coupling is employed between limiter stages to provide base-line limiting of the subcarrier signal, thus eliminating the effects of amplitude modulation and amplifier bias changes. The limiter circuit output is applied to the INPUT meter control circuit and to the zero signal detector.

The INPUT meter control circuit is employed to drive the front panel INPUT meter (A1M1) which indicates the magnitude of the incoming subcarrier signal. This circuit is composed of transistor stages Q8 through Q10 arranged in an operational amplifier configuration, diode rectifiers CR7 and CR8, and associated discrete components on input card A2A3. (See Figure 5-5.) The subcarrier from the limiter circuit is coupled to the operational amplifier. The amplifier output is coupled through capacitor C22, rectified by diodes CR8 and CR9, and routed to pin A2A3-24 and -25 which are connected to the (+) and (−) terminals respectively of the front panel INPUT meter. Diode CR9 and resistor R52 shunt the meter to provide meter protection from excessively high amplitude inputs. A portion of the amplifier output is coupled through resistors R45 and R46 to complete the feedback loop for the operational amplifier.

The function of the zero signal detector is to sense for a condition in which the amplitude of the incoming subcarrier signal is sufficiently low so as to possibly result in erroneous data at the discriminator output. Components of this circuit consist of transistor stages Q11 through Q18 and associated discrete components located on card A2A3. (See Figure 5-5.) The square-wave subcarrier input signal from the limiter circuit is applied to amplifier Q11. This stage functions as a half-wave rectifier due to the rapid charge time of capacitor C29 during positive half cycles of the input signal and the slow discharge time during negative half cycles. Thus, the output of Q11 is coupled through follower Q12 and capacitor C30 and provides the trigger pulses for transistor switch Q13. With Q13 cutoff, capacitor C31 charges toward +18 volts through resistor R75. When Q13 is turned on, the positive charge on the capacitor is shorted to ground through the transistor. With an acceptable input signal amplitude, the duty cycle of Q13 is such that the transistor is not in the cutoff state long enough for C31 to charge to the point at which Q14 turns on. When the input signal amplitude is below acceptable limits (nominally 10 millivolts), the negative-going transition at the output of Q11 is decreased. Thus, the base of Q13 is reverse biased holding Q13 in the cutoff state, thereby allowing capacitor C31 to charge toward the +18 volt supply voltage. At approximately 4.3 volts, the base of Q14 is forward biased turning Q14 on. As C31 continues to charge, the common emitter voltage for Q14/Q15 increases in the positive direction causing Q15 to shut off. When Q15 is cutoff, the positive transition at the collector is coupled through follower Q17 and drives transistor switches Q17 and Q18 to saturation. The resultant ground level output from Q18 provides a DC return for the front panel SIGNAL LOSS indicator, and transistor Q17 provides the DC return for control relay A2A15K2 in the output amplifier circuit which clamps the discriminator output at an adjustable level from +18 volts to −18 volts.

Potentiometer A2A3R73 is used to adjust the zero signal tolerance. Zener diode CR10 provides circuit protection by limiting the positive excursion at the base of Q14 to +6.2 volts.

4.3.2.3 Out-of-Range Detector

The function of the out-of-range detector circuit is to sense for conditions in which the incoming subcarrier signal is operating at a frequency above or

below the bandedge frequencies of the selected subcarrier channel. The circuit, as shown in Figure 4-3, is composed of positive and negative detectors with a common output switching network. The input to the out-of-range detector circuit is a pulsating DC representative of the selected subcarrier input signal. The RC network composed of resistor R88 and capacitors C35 and C36 filters the input signal to provide an average DC level. This level will vary from approximately +1 volt to −1 volt for lower and upper bandedge signals, respectively. When the input signal is within this range, the + detector is turned off providing a 0-volt input to transistor switch Q27. At the same time, the − detector is turned on and provides a +10 volt input to inverter Q25. This level triggers Q25 thereby providing a 0-volt input to transistor switch Q26. Thus, when the input frequency is within range, both Q26 and Q27 are inhibited providing an open circuit for control relay K2 on card A2A15. Inverter Q28 is turned on by the relay control voltage and provides a logic ZERO (0-volts) out-of-range signal to the remote control device.

If the input signal increases in frequency above bandedge, the average DC input to the + detector increases in the negative direction causing the detector to turn off. The resultant positive-going output of the detector drives transistor switch Q27 into saturation, and thereby provides a DC return for relay A2A15K2 through the transistor. Also, the output level of inverter Q28 is reversed to provide a logic ONE (+5.2 volts) out-of-range signal to the remote control device.

If the input signal frequency falls below the lower bandedge of the selected subcarrier channel, the DC input to the − detector becomes more positive. As a result, the detector is turned on and the negative-going output shuts off inverter Q25. The positive transition at the output of Q25 forward biases transistor switch Q26 which thus provides the DC return for control relay A2A15K2.

4.3.3 FM Detection Circuit Group (Ref. Figure 4-4)

The FM detection circuit group is composed of three functional circuits; a limiter function, a detector, and a single pole filter. All components of this circuit group are located on limiter/detector/single pole card A2A8. The single pole function is the first stage of the three-, five-, or seven-pole low-pass output filter (LPOF) but is described in the following paragraphs because of its immediate relationship with the detector.

4.3.3.1 Limiter Function

The limiter function is a four-stage high-gain limiter/amplifier circuit which converts the single-ended, selected subcarrier channel signal received from the band-pass input filter, into complementary, substantially constant-amplitude square wave outputs. The first three stages of the limiter are differential amplifier configurations and the fourth stage is used as a complementary output transistor switch. The differential amplifiers operate on zero crossings driving one side hard toward saturation and the other side hard toward cutoff for one-half

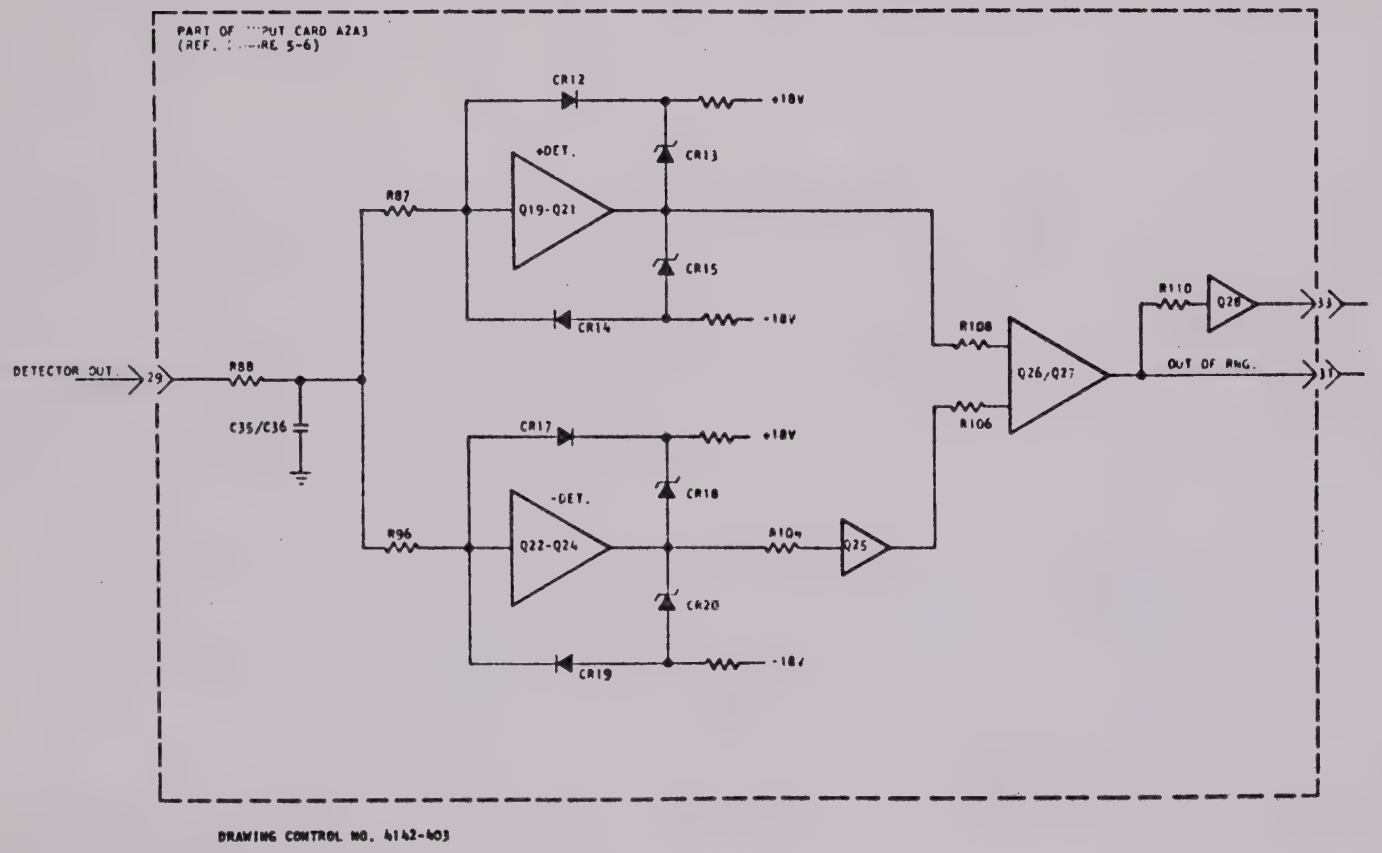

DRAWING CONTROL NO. 4142-403

Figure 4-3. Out-of-Range Detector Simplified Schematic Diagram

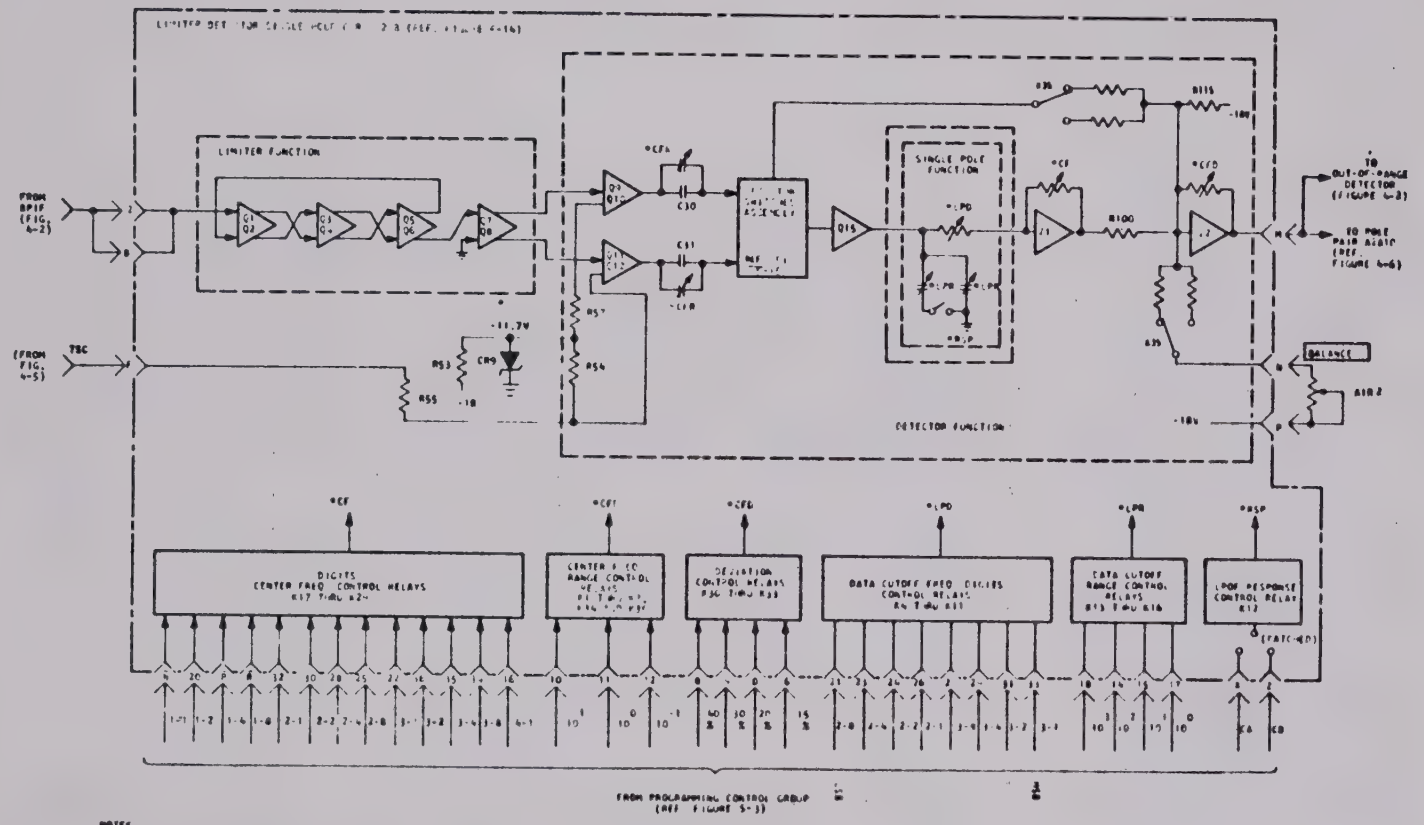

NOTES:

1. THE ASTERISK INDICATES COMPONENTS CONTROLLED BY THE RELAYS.
2. DRAWING CONTROL NO. 6162-604, REV. B

Figure 4-4. FM Detector Circuit Group Functional Block Diagram

cycle of the input sine wave. The direction of drive in each half of the differential amplifier stages is reversed for the second half-cycle of the input. Clamping diodes across the collectors in the first two stages (Q1/Q2 and Q3/Q4) limit the output voltage swing, thereby squaring the input waveform while maintaining zero crossings. The third amplifier stage (Q5/Q6) provides a low-gain and a high-gain output. The low-gain output is a feedback input to the first amplifier stage which compensates for low frequency hysteresis. The high-gain output provides the input drive for the transistor switch Q7/Q8. The complementary outputs of switch Q7/Q8 change state at each zero crossing and provide the triggering inputs for current switches in the detector function. AC coupling is employed between limiter stages to provide base-line limiting of the subcarrier input signal, thus eliminating the effects of amplitude modulation and amplifier bias changes.

4.3.3.2 Detector and Single Pole Functions

The FM detector is essentially an energy detecting circuit which generates a serial stream of current pulses from the subcarrier rate inputs and determines an average amount of energy in the pulse stream. Primary inputs to the detector are the complementary square-wave outputs from the limiter function. Each of the subcarrier rate square-wave signals is applied to a switching device (Q9/Q10 or Q11/Q12) which operate identically but 180° out of phase. Each switch produces square-wave output pulses of fixed amplitudes (+18 volts to +8 volts) with the pulse period being determined by the subcarrier input frequency. The complementary square-wave outputs of the Q9/Q10 and Q11/Q12 are differentiated by RC networks in the outputs. The capacitive component of each RC network is varied for each of four programmable center frequency ranges of the Model 4142 by center frequency range control relays K1 through K3 and K34. The complementary, differentiated pulses are applied to the detector switches assembly. This assembly, Figures 5-14A and 5-14B, is composed of dual, temperature compensated, base rectifier circuits. Each base rectifier passes the positive-going output pulses from the associated RC network and routes these pulses to summing amplifier Q15. The resultant output of this circuit is a stream of current pulses at twice the input frequency. These current pulses provide negative charges on the capacitive component of the single pole function RC network. This charge induces a current flow through the resistive component of the RC network and the feedback loop of operational amplifier Z1.

When the subcarrier input is operating at the programmed center frequency, the generated pulse stream contains a certain average energy level. This energy level causes a current flow through the feedback loop of amplifier Z1, such that the average DC voltage output at Z1 is $\approx$+1.5 volts for all center frequencies. The resultant current flow through R100 (1.5 milliamps) is provided from the −18-volt supply through the front panel BALANCE potentiometer (A1R2) and a test variable resistive load. At center frequency, no current flows through the feedback loop of operational amplifier Z2 and, thus, the center frequency output voltage applied to the low-pass output filter is 0 volt. Increases or decreases in the subcarrier frequency change the rate at which the current pulses are generated. This results in an increase or decrease in the average current level for the pulse stream. The change in average current is the modulation component of the input signal. Thus, an increase of input signal

frequency above the programmed center frequency increases the negative charge on the capacitive component of the single pole function, thereby increasing the average current flow through the resistive component. Since the input to amplifier Z1 is maintained at 0 volts, the increased current flow through the feedback loop causes an increase in the average voltage at the output of Z1. Thus, the current flow through resistor R100 is increased. The current supplied through BALANCE potentiometer A1R2 is fixed at ≈1.5 milliamps. The additional current is supplied through the feedback loop of amplifier Z2 causing a negative-going voltage shift at the output of Z1. The resistive value of the Z2 feedback loop is a function of the programmed center frequency deviation and is selected to provide a −1 volt to +1 volt swing from upper bandedge to lower bandedge for any programmed deviation.

If the subcarrier input signal is below the programmed center frequency, the rate of the current pulses is decreased thereby decreasing the average current flow through the feedback loop of amplifier Z1. As a result, the average voltage output of Z1 decreases which decreases the current flow through R100. Again, since the current flow through the BALANCE potentiometer is fixed at ≈1.5 milliamps, the excess current is coupled through the feedback loop of amplifier which results in a positive-going voltage shift at the output of Z2.

An additional input to the detector function is the tape-speed compensation input. The generation of this signal and its affect on detector operation are described in the following paragraphs.

4.3.4 Tape-Speed Compensation (Ref. Figure 4-5)

The -02, -04, and -06 configurations of the Model 4142 discriminator are provided with a tape-speed compensation (TSC) control circuit. The function of the TSC circuit is to compensate for selected subcarrier frequency errors resulting from tape-speed variation. A proportional reference discriminator, such as another Model 4142, detects the tape-speed change and produces a voltage proportional to the percent of change. This voltage is applied to rear panel connector A3A2 and routed to the input (pin 12) of TSC card A2A7. The TSC circuit is essentially an RC delay network with intermediate stages of amplification. The discrete resistive and capacitive values used in the delay network are automatically selected by the programmed center frequency and deviation parameters to match the inherent delays of the band-pass input filter. The TSC input normally accepts a positive sense with a sensitivity of 4 volts peak for 3.0% deviation. If negative sense is required, this may be obtained by switching the output jumper on card A2A7 from terminal E1-E2 to terminals E1-E3. This places inverter stage Z4 in series with the output, thereby providing a negative-going output for a positive-going input.

Assuming the reference discriminator is programmed for positive sense (TSC input voltage directly proportional to tape-speed error), an increasing frequency tape-speed error provides a positive-going TSC input voltage to card A2A7. With the TSC card jumpered for positive sense (E1 to E2), the output voltage at pin 13 is positive. This signal is applied through resistor R55 on the FM

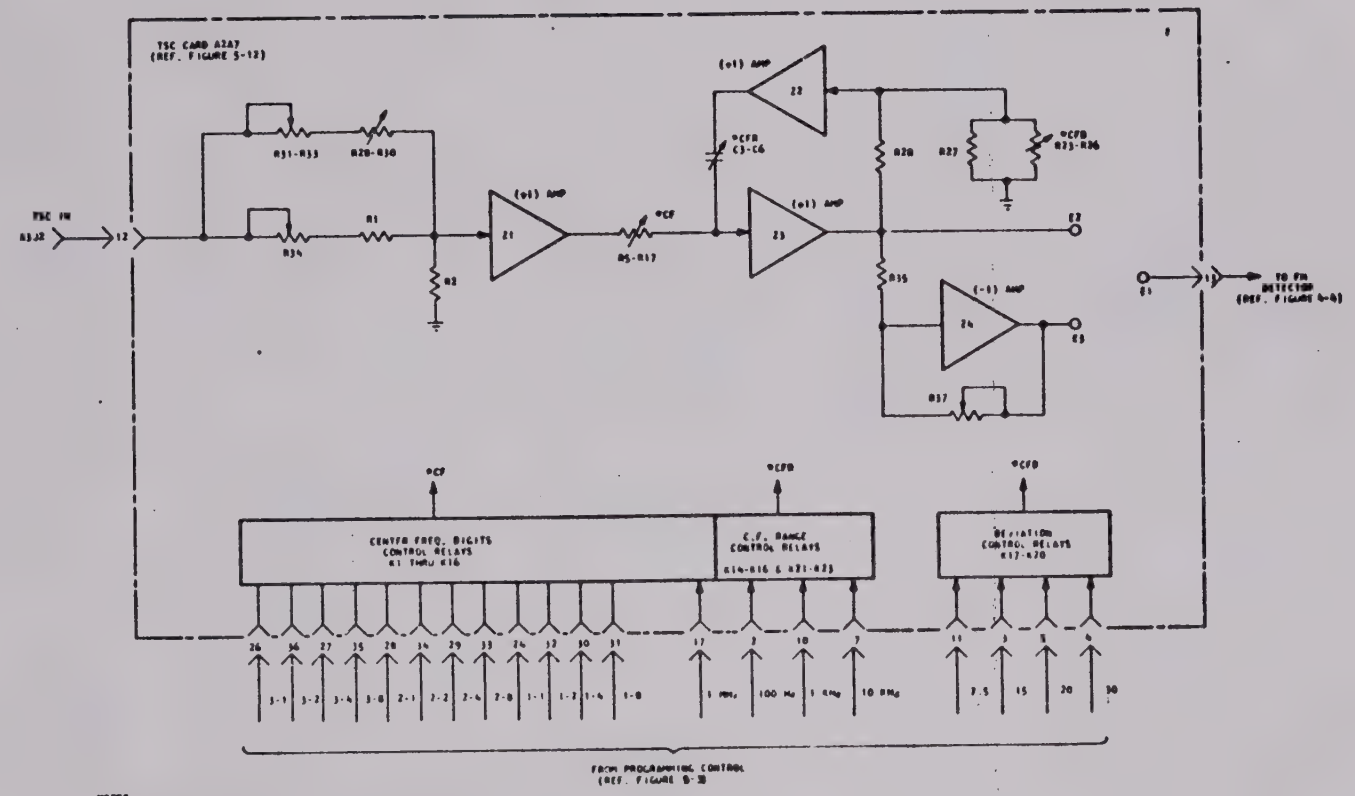

NOTES:

1. THE ASTERISK INDICATES COMPONENTS CONTROLLED BY THE RELAYS.
2. DRAWING CONTROL NO. 4142-605.

Figure 4-5. Tape-Speed Compensation Circuit Group Simplified Logic Diagram

detector card to the Q11/Q12 transistor switching circuit. (See Figure 4-4.) The tape-speed error, as a component of the multiplex input, increases the rate of the square-wave inputs to the detector which increases the average current in the detector, thereby decreasing the output voltage. However, the TSC input voltage, representative of magnitude of the error, produces a current flow through resistor R55. Since the emitter voltage of transistor Q12 fixes the current flow through resistor R54, the current flow through R55 is offset by decreasing the current through Q12 which in turn limits the amplitude of the square-wave pulses at the collector. Thus, the overall average current flow in the detector decreases which results in an increasing voltage at the output.

4.3.5 Low-Pass Output Filter and Output Amplifier Circuit Group (Ref. Figure 4-6)

This circuit group is composed of either a three-, five-, or seven-pole low-pass output filter (LPOF) and the output amplifier. Individual descriptions of these circuits are provided in the following paragraphs.

4.3.5.1 Low-Pass Output Filter

The function of the LPOF is to suppress undesired high-frequency subcarrier components in the signal received from the FM detector, thereby providing a noise-free output signal representative of the data contained in the selected subcarrier channel. Filter cutoff frequencies between 4 Hz and 300 kHz are selectable to three significant digits. Also, either constant amplitude (CA) or constant delay (CD) filter response characteristics may be selected. Selection of the operating parameters for the low-pass filter are programmed from either the front panel of the Model 4142 or from an external source. The front panel LOCAL/REMOTE switch selects the desired mode of operation.

The LPOF is composed of either three, five, or seven relay-tunable, RC filter stages, depending upon the design configuration. Each filter stage is followed by an isolation amplifier. For all configurations of the Model 4142, the first filter stage is located on card A2A8 and is functionally part of the FM detector as described in paragraph 4.3.3. For three-pole LPOF configurations (Models 4142-01 and -02), the second and third filter stages are located on pole-pair card A2A12. For five-pole configurations (Models 4142-03 and -04), filter stages two through five are located on pole-pair cards A2A11 and A2A12. For seven-pole LPOF configurations (Models 4142-05 and -06), all three pole-pair cards are used. Since the operation of each pole-pair card is the same, only the operation of the filter stage located on card A2A10 (Figure 4-6) is discussed below.

Data cutoff control relays K1 through K9, data cutoff range relays K10 through K14, and response relay K15 are controlled by the programmed input signals received from the programming control circuit group. A logic ZERO (ground level) input on any line allows the associated relay to energize. Thus, a discrete RC filter network is established for each set of data cutoff frequency/response

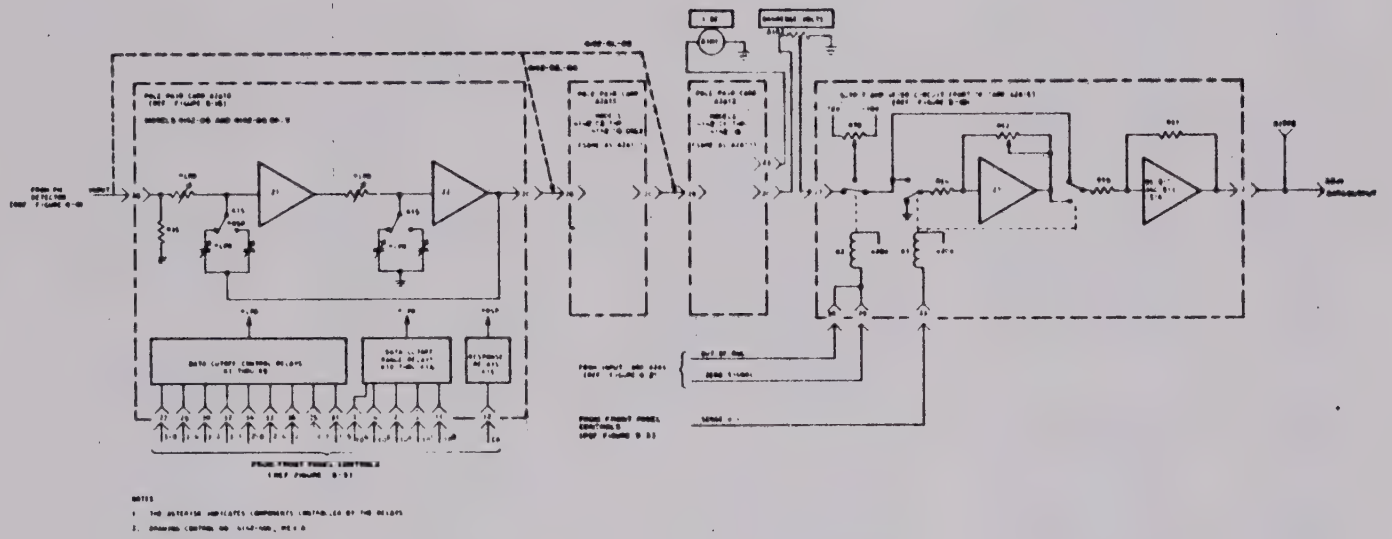

Figure 4-6. Low-Pass Output Filter and Output Amplifier Circuit Group Functional Block Diagram

characteristic parameters that is programmed. The RC component values are selected to exhibit the proper frequency attenuation for the programmed cutoff frequency so as to route only the low-frequency intelligence in the subcarrier input to the output amplifier circuit.

In order to prevent interaction between filter poles in the LPOF, isolation amplifiers are used between each RC network. An in-phase feedback loop is provided between the output of the second isolation amplifier and the input of first isolation amplifier on each pole-pair card. The purpose of the active feedback loop is to shape the frequency response in a manner that is not possible with only passive components. Each feedback loop, in effect, varies capacity as a function of frequency in order to maintain the actual output response curve at an amplitude level as close as possible to the optimum curve.

4.3.5.2 Output Amplifier Circuit

The output amplifier circuit is composed of the front panel BANDEDGE VOLTS control (A1R1) and polarity sense relay K1, zero signal relay K2, operational amplifier Z1, and the output amplifier consisting of transistor stages Q5 through Q10 and Q13 through Q16 located on regulator/output amplifier card A2A15. The filtered data output is routed from pin 20 of the last pole-pair card in the LPOF to BANDEDGE VOLTS potentiometer (A1R1). Potentiometer A1R1 controls the amplitude of the data signal input applied to the output amplifier thus controlling the resultant output amplitude. The BANDEDGE VOLTS control is adjusted to provide specific output levels, within the range of +10 volts to −10 volts, for peak upper and lower bandedge deviation, respectively.

The adjusted data signal is applied to card A2A15 at pin 27 and routed through contacts of zero signal relay K2. If the amplitude of the selected subcarrier input signal is below a preset level or if the frequency of the input signal is outside the programmed deviation limits, a ground input is applied to relay K2 from input card A2A3 causing the relay to energize. (Refer to paragraph 4.3.2.) When relay K2 is energized, the input to the output amplifier is clamped to a value preset at potentiometer R70. Potentiometer R70 is normally adjusted to provide a data output level of +11 volts or −11 volts, depending on the deviation sense mode of operation, thus providing an off-scale indication to recording devices monitoring the discriminator output. This value may set at any value between +11 volts and −11 volts as required by the user.

Polarity sense relay K1 is controlled by front panel SENSE switch A1S14. When switch A1S14 is in the (−) position, relay K1 is de-energized and operational amplifier Z1 is bypassed. Thus, the filtered data output from the LPOF is coupled directly to the output amplifier and the output voltage (pin 21) becomes more negative as the frequency of the input signal increases. When switch A1S14 is in the (+) position, relay K1 is energized providing a polarity inversion through amplifier Z1. Thus, the output voltage becomes more positive as the input signal frequency increases.

The output amplifier is composed of a differential input amplification stage (Q5, Q6, Q7, and Q13), dual complementary emitter-follower output stages (Q8/Q10 and Q14/Q15), and current limiter stages (Q9 and Q16). (See Figure 5-18.) The gain of the amplification stage is approximately 1.5. The dual complementary emitter-follower stage provides for a low impedance, high-current output. The limiter stages limit the output current to 100 milliamperes minimum and 140 milliamperes maximum.

4.3.6 DC Power Circuits (Ref. Figures 5-18, 5-22, and 5-23)

The power supply assembly (A4) and the voltage regulator circuits on regulator and output amplifier card A2A15 provide all DC voltages required for the operation of the Model 4142 PBW Tunable Discriminator. As shown in Figures 5-22 and 5-23, the primary AC power is routed from rear panel connector A3J6 to the front panel POWER switch A1S13. Switch A1S13 controls application of AC power to rear panel blower A3B1 and to the primary of the primary winding of power transformer A4T1. The power supply assemblies for Model 4142-0X-0 configurations (Figure 5-22) and the Model 4142-0X-8 configurations (Figure 5-23) are the same except the -0 configurations are provided with a 115V AC input and the -8 configurations are provided with a 230V AC input. Thus, different power transformers are required for the -1 and -8 configurations and the connections for blower motor A3B1 vary slightly.

Three secondary windings of transformer A4T1 are connected to full-wave diode bridge rectifiers A4CR1, A4CR2, and A4CR3. These rectifiers provide the unregulated DC voltage inputs to five voltage regulator circuits on card A2A15 (see Figure 5-18). Since the operation of each regulator circuit on card A2A5 (+18 volts, −18 volts, +5.2 volts, and +20 volts) is similar, only the operation of the +18 volt regulator is discussed in detail.

The +18 volt regulator circuit is composed primarily of a series regulator, a regulator driver A2A15Q1, a differential comparison amplifier A2A15Q3, and a temperature-compensating, constant-current source A2A15Q2. The unregulated +18 volt output of diode bridge rectifier A4CR1 is routed through fuse A4F1 and series regulator A4Q1 to pin A2A15-14 for distribution to the discriminator circuits. Regulator driver A2A15Q1 provides the base drive current for the series regulator. Regulation is accomplished by comparing a sample of the output voltage, sensed by potentiometer R16, with a reference voltage established by diodes CR2 and CR3. The differential comparison amplifier senses the magnitude and direction of any output voltage changes and produces an output that is proportionally equal and opposite to the error detected. The error signal output controls the biasing of regulator driver Q1 which in turn controls the conduction of series regulator A4Q1, thus compensating for the output voltage change. Stage A of transistor Q2 provides the current source for the high-gain output of stage A in the differential amplifier. Stage B of transistor Q2 is connected as a diode which provides temperature compensation for the +18 volt regulator.

The functional operation of the −18 volt, +20 volt, and +5.2 volt regulators on card A2A15 are similar to that provided for the +18 volt regulator except the +20 volt and +5.2 volt regulators are not adjustable.

SECTION 5

MAINTENANCE

5.1 GENERAL

This section contains information to aid in troubleshooting and maintaining the Model 4142 PBW Tunable Discriminator. This information is intended to be used with the circuit descriptions contained in Section 4 to maintain the Model 4142 at the optimum operational status. Maintenance information included in this section includes a troubleshooting guide (paragraph 5.2); checkout and adjustment procedures (paragraph 5.3); and assembly, schematic, and wiring diagrams (Figures 5-1 through 5-23).

5.2 TROUBLESHOOTING GUIDE

In the event an abnormal condition is detected, or suspected, in the operation of the Model 4142, the following general method of isolating and repairing the trouble is recommended:

a. Perform a visual inspection (paragraph 5.2.1).

b. Perform the checkout and adjustment procedures (paragraph 5.3) to localize a malfunction to a functional circuit.

c. Use standard maintenance techniques based on a knowledge of normal circuit operation (Section 4) and the assembly, schematic, and wiring diagrams (Figures 5-1 through 5-23) in order to isolate the failure to a replaceable part.

d. When the defective component is located, refer to Section 6, Parts Lists, for description and part number of replacement component.

e. After replacing components, repeat applicable checkout and adjustment procedures to ascertain that the original failure has been removed and that a new failure has not been introduced.

The Model 4142 should be subjected to a regular inspection program similar to that recommended for other types of electronic equipment. The following visual inspection should be performed periodically as a means of preventive maintenance, or if a malfunction occurs, to aid in isolating the trouble.

a. Inspect wiring for loose or broken connections.

b. Inspect front panel and rear panel connectors, switches, and controls for signs of damage.

c. Inspect printed-wiring cards for mechanical damage or component discoloration.

d. Inspect card tray, card guides, and card mating connectors for signs of damage.

5.3 CHECKOUT AND ADJUSTMENT

The procedures contained in this paragraph are designed to provide a means for evaluating the operational status of the various functional circuits contained in the Model 4142 PBW Tunable Discriminator. Where applicable, instructions are provided in the checkout procedures for restoring a malfunctioning circuit to within acceptable operational limits by adjustment. References are provided in the procedural instructions to applicable circuit descriptions contained in Section 4 in the event troubleshooting a malfunctioning functional circuit is required.

Several circuits contain components which are aged at the factory to provide optimum performance. These components are identified either by an asterisk and note on the schematic diagram or in a NOTE on the page preceding the schematic. When replacing any of these components, order the component from EMR. Specify "aged" component and the assembly number of the card for which it is required. See Section 6 for the correct parts list for each assembly.

The appropriate checkout and adjustment procedures should also be performed following replacement of components to verify that the failure has been corrected.

5.3.1 Test Equipment Required

The following test equipment or equivalent is recommended for the checkout and adjustment procedures outlined in this section.

a. DC Voltmeter: John Fluke 825A or equivalent.

b. Signal Generator: Waveforms 401 or equivalent.

c. RMS Meter: Hewlett-Packard 400L or equivalent.

d. Frequency Counter: Hewlett-Packard 5245L or equivalent.

e. Oscilloscope: Tektronix 545A or equivalent.

5.3.2 Voltage Regulators

To check the operation of the power supply assembly (A4) and the voltage regulator circuits on card A2A15, proceed as follows:

NOTE

If one or more of the following voltage levels are excessively out of tolerance, troubleshoot the power supply circuits (ref. paragraph 4.3.6) before attempting adjustment.

a. Connect a Fluke 825A DC voltmeter between TP2 (+) and TP5 (ground) on card A2A15. The voltmeter should indicate +18 volts ±50 millivolts. Adjust potentiometer A2A15R16, if necessary, to obtain proper indication.

b. Connect the DC voltmeter between TP1 (−) and TP5 (ground) on card A2A15. The voltmeter should indicate −18 volts ±50 millivolts. Adjust potentiometer A2A15R18, if necessary, to obtain proper indication.

c. Connect the DC voltmeter between TP7 (+) and TP5 (ground) on card A2A15. The voltmeter should indicate approximately +5 volts. The +5-volt regulator is not adjustable. If indication is abnormal, troubleshoot the power supply and regulator circuit. (Ref. Figure 5-18.)

d. Connect the DC voltmeter between TP8 (+) and TP5 (ground) on card A2A15. The voltmeter should indicate approximately +20 volts. This level is not adjustable.

5.3.3 Input Control and Band-Pass Circuits Checkout Procedures

The following paragraphs are designed for checkout and adjustment of the input control and band-pass circuit group. If normal output indications cannot be obtained, refer to paragraph 4.3.2 for circuit descriptions.

5.3.3.1 Band-Pass Input Filter Checkout Procedure

a. Using an external signal generator and an rms meter, apply an unmodulated subcarrier signal of 1 volt rms at the rear panel INPUT connector A3J3.

b. Using the front panel controls, program the Model 4142 to accept the selected subcarrier signal input.

5.3.3.4 Out-of-Range Detector Checkout Procedure

a. Using an external signal generator and an rms meter, apply an unmodulated subcarrier signal of 1 volt rms to the rear panel INPUT connector A3J3.

b. Set the discriminator front panel controls to accept the selected subcarrier signal input.

c. Using a DC voltmeter, measure the voltages at A2A3TP2 and TP3. These are as follows:

TP2 -- +5 volts (approximate)
TP3 -- -5 volts (approximate)

d. Deviate the subcarrier signal input beyond the upper bandedge of the selected subcarrier channel and observe that the front panel OUT-OF-RANGE indicator illuminates.

e. Measure the voltage at TP3; this should be approximately +5 volts.

f. Deviate the subcarrier signal below the lower bandedge of the selected subcarrier channel and observe that the front panel OUT-OF-RANGE indicator illuminates.

g. Measure the voltage at TP2; this should be approximately -5 volts.

5.3.4 FM Detector Circuit Group Checkout Procedures

The following procedures are designed to check the operation of the FM detector circuit group. If normal indications cannot be obtained, refer to the appropriate circuit description provided in paragraph 4.3.3.

NOTE

Perform the following procedures with FM detector card A2A8 installed on an extender card (EMR-T Part No. 14199).

5.3.4.1 Limiter Circuit Checkout and Adjustment Procedure

a. Using an external signal generator and an rms meter, apply an unmodulated 10 kHz subcarrier signal of 10 millivolts rms to the rear panel INPUT connector A3J3.

b. Set the discriminator front panel controls to accept the 10 kHz subcarrier signal input.

c. Using an oscilloscope, observe the waveforms at the junctions of C19/R43 and C20/R45 on card A2A8. (Reference Figures 5-13 and 5-14.) The output waveforms should be symmetrical 10 kHz square waves, 180° out of phase.

d. Increase the subcarrier input amplitude to 100 millivolts and observe that the waveforms of step (c) do not change. If necessary, adjust potentiometer A2A8R6, while switching between 10 millivolt and 100 millivolt input levels, to adjust square wave symmetry.

e. Increase the input signal amplitude to 5 volt rms and observe that the waveforms of step (c) do not change.

5.3.4.2 Detector Circuit Checkout Procedure

a. Using an external signal generator, apply a 100 kHz subcarrier input signal to rear panel INPUT connector A3J3.

b. Program the Model 4142 front panel controls as follows:

SWITCHES	POSITION
CONTROL	LOCAL
CENTER FREQUENCY	0100. kHz
DEVIATION	20
SENSE	+
DATA CUTOFF	010. Hz
LPOF	CA

c. Connect a DC voltmeter to test jack TP1 of the first pole-pair card in the applicable discriminator configuration. (Card A2A12 for Models 4142-01 and -02, card A2A11 for Models 4142-03 and -04, and card A2A10 for Models 4142-05 and -06.) Rotate the front-panel BALANCE control to obtain a 0-volt indication.

d. Adjust the signal generator to provide a 120 kHz subcarrier input. The DC voltmeter should indicate approximately −1 volt (−1.0 to −1.1 volt acceptable).

5.3.5 Low-Pass Output Filter and Output Amplifier Circuit Group Checkout Procedures

The following paragraphs describe the checkout and adjustment procedures for the individual circuits of the LPOF and output amplifier circuit group. If proper

output indications cannot be obtained, refer to the appropriate circuit description provided in paragraph 4.3.5.

5.3.5.1 LPOF Checkout and Adjustment Procedure

a. Remove the FM detector card A2A8.

b. Rotate front panel BANDEDGE VOLTS control fully clockwise.

c. Using an external voltage source, apply a +1-volt ±10-millivolt input level to test jack TP1 on the first pole-pair card in the discriminator. (Card A2A12 for Models 4142-01 and -02, card A2A11 for Models 4142-03 and -04, and card A2A10 for Models 4142-05 and -06.)

d. Using a DC voltmeter, measure the input level to the output amplifier at test jack A2A15TP6. The voltage level should be +1 volt ±20 millivolts. If normal indication cannot be obtained, adjust the LPOF circuit as follows:

1. Apply a ground to test jack TP1 on the first pole-pair card of the discriminator.

2. Connect a DC voltmeter to test jack TP2 on the card.

3. Adjust potentiometer R14 for a 0-volt ±10-millivolt reading on the voltmeter.

4. Connect the voltmeter to test jack TP3 and ground test jack TP2.

5. Adjust potentiometer R29 for a 0-volt ±10-millivolt reading on the voltmeter.

6. Repeat steps (2) through (5) for the second and third pole-pair cards, if applicable, leaving the ground of step (1) connected to the first pole-pair card.

CAUTION

Remove the ground before replacing the FM detector card.

7. Replace the FM detector card.

5.3.5.2 Output Amplifier Checkout and Adjustment Procedure

a. Using an external signal generator, apply a 100 kHz subcarrier input signal to rear panel INPUT connector A3J3.

b. Set the Model 4142 front panel controls as follows:

CONTROLS	POSITION
CONTROL	LOCAL
CENTER FREQUENCY	0100. kHz
DEVIATION (±%)	20
SENSE	+
DATA CUTOFF	10.0 Hz
LPOF	CA
BANDEDGE VOLTS	Fully Clockwise

c. Connect a DC voltmeter to DATA OUT test jack A1TP2. Rotate the front-panel BALANCE control to obtain a 0-volt (±200-millivolt) indication.

d. Adjust the signal generator for an input signal frequency of 120 kHz. The DC voltmeter should indicate +10 volts minimum.

e. Set the front panel SENSE switch to (–). The voltmeter should indicate –10 volts minimum.

If normal output indications cannot be obtained, calibrate the output amplifier circuit as follows:

a. Remove pole-pair card A2A12.

b. Apply a ground level to test jack TP6 on card A2A15.

c. Connect a DC voltmeter to test jack TP4 on card A2A15.

d. Set the front panel SENSE switch to (–).

e. Adjust potentiometer A2A15R65 for a 0-volt ±10 millivolt indication on the voltmeter.

f. Set the front panel SENSE switch to (+).

g. Connect the voltmeter to test jack A2A15TP3 and adjust potentiometer A2A15R71 for a 0 volt ±20 millivolt indication on the voltmeter.

h. Alternately set the SENSE switch for positive (+) and negative (–) sense and adjust potentiometer A2A15R71 to the point at which deviation of meter indication is minimum.

i. Remove the ground input from test point A2A15TP6 and apply a calibrated +1 volt level to the test point.

j. Alternately set the SENSE switch for positive (+) and negative (−) sense and adjust potentiometer A2A15R52 to the point at which the positive and negative output indications are of equal magnitude.

k. Replace the pole-pair card removed in step (a).

5.3.6 Tape-Speed Compensation (TSC) Circuit Checkout and Adjustment Procedure

The following procedure is designed to check the operation of the TSC circuit contained in Models 4142-02, -04, and -06 discriminators. If the proper indications cannot be obtained, refer to the TSC circuit description provided in paragraph 4.3.4.

a. Using an external signal generator, apply an unmodulated 10 kHz subcarrier signal to rear panel INPUT connector A3J3. Signal amplitude may be any value from 10 millivolts to 5 volts rms.

b. Program the Model 4142 front panel controls to accept the 10 kHz center frequency subcarrier input and ±30% deviation.

c. Set front panel SENSE switch to +.

d. Using a DC voltmeter, monitor the voltage level at front panel test jack A1TP2 (DATA OUT). Rotate the front panel BALANCE control to obtain a 0-volt indication.

e. Using an external voltage source, apply a +4 volt level to the rear panel TSC connector A3J2.

f. If the discriminator TSC is set for positive sensing (E1 to E2 jumper on TSC card; see Figures 5-11 and 5-12), the DC voltmeter should indicate −1 volt. Positive sensing TSC is normally supplied; however, negative sensing can be provided by changing the TSC card jumper to connect E1 and E3. For negative sensing TSC, the data output will be +1 volt in this test.

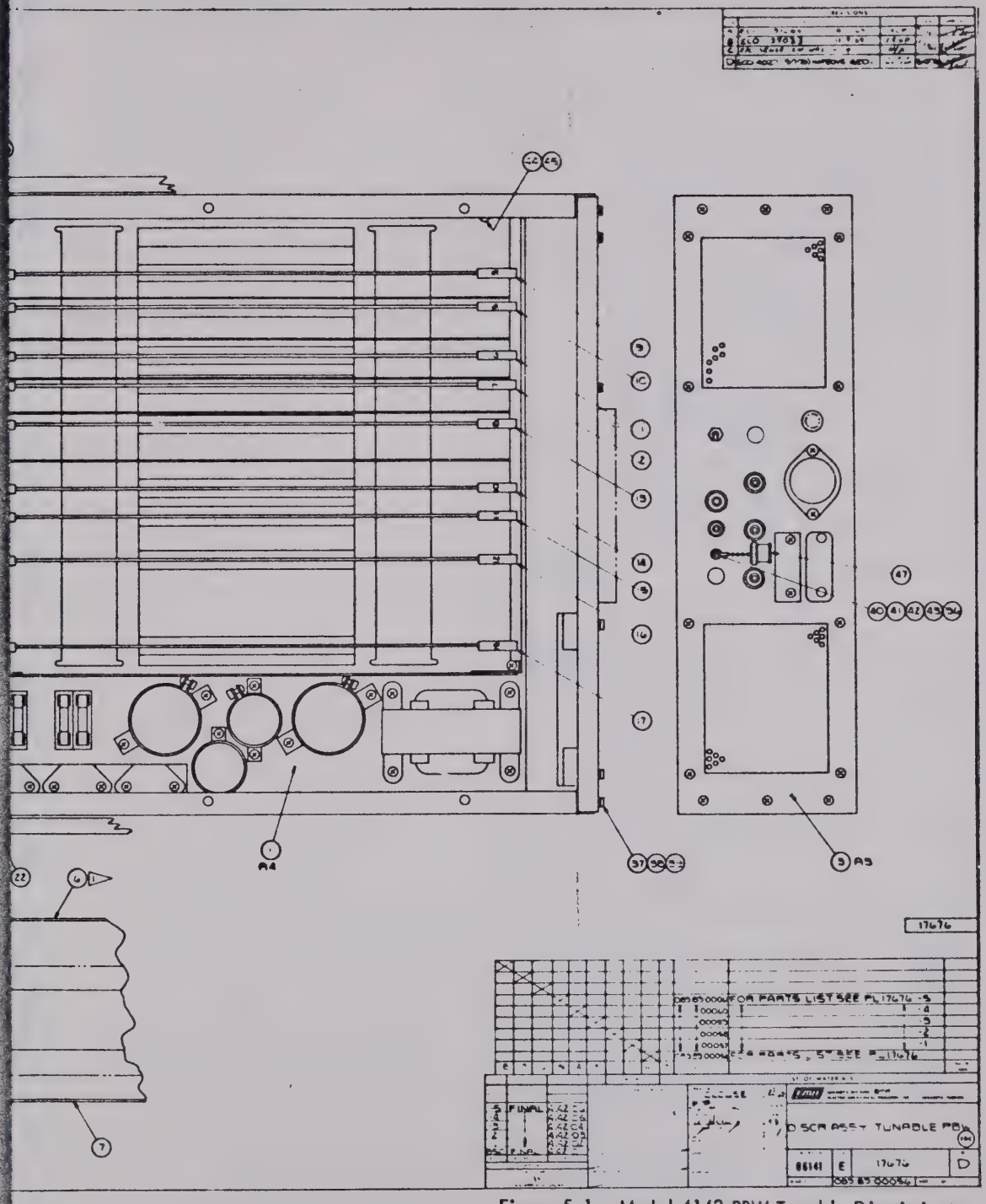

Figure 5-1. Model 4142 PBW Tunable Discriminator Major Assembly Locations

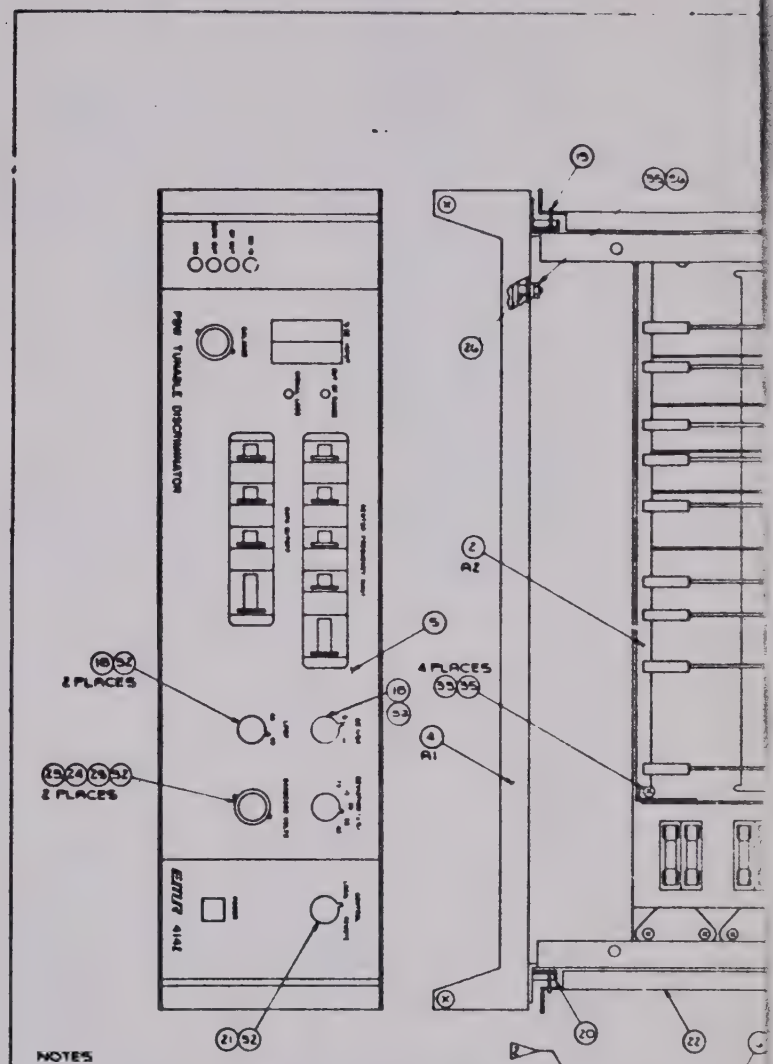

NOTES

1. ITEM 6, TOP COVER ASSY. IS NOT SHOWN IN TOP VIEW
2. APPLY APPLICABLE TITLE, MODEL, SERIAL & ASSY NOS .090 HIGH, COLOR BLACK 27038 OF FED STD 595, INK TO CONFORM TO FED SPEC TT I 558
3. EXTENDER CARD, ITEM 46, IS SHIPPED WITH UNIT UNINSTALLED
4. ITEMS 27, 28, 48, 49, 50. ARE NOT SHOWN IN F/D.
5. ITEM 28, GROMMET, IS USED TO PREVENT WIRES FROM CHAFING ON SHARP EDGES OF SHEET METAL. IT MAY BE NECESSARY TO TRIM THE GROMMET IF SPACE DICTATES
6. C1, L1, L2(R) ARE NOT SHOWN IN F/D BUT ARE TO BE WIRED ON CARD FILE AS SHOWN ON CARD FILE WIRING DIAGRAM CALLED FOR ON PL-17676 THRU PL-17676-5. SLEEVE LEADS OF COMPONENTS A/R.

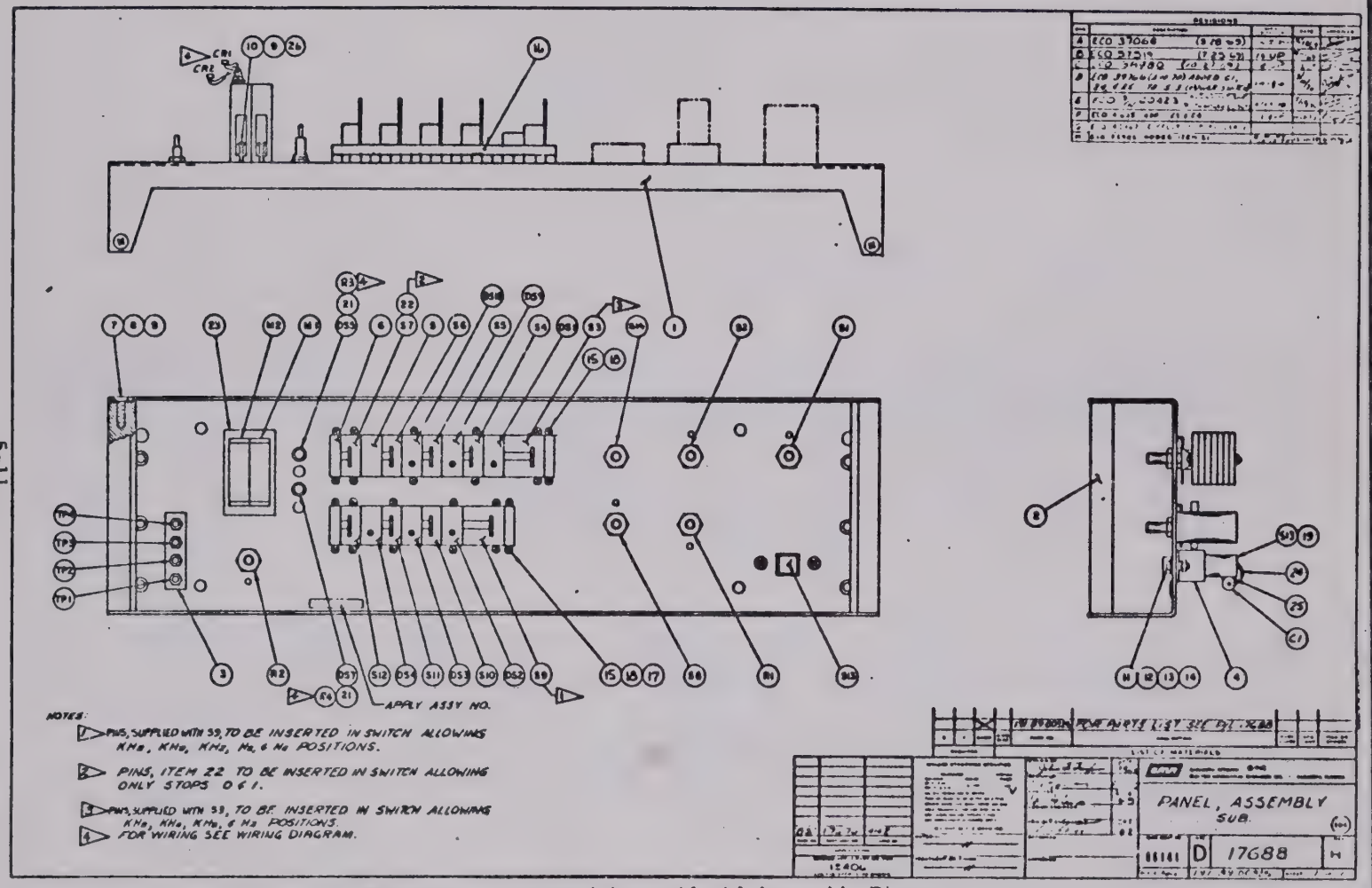

Figure 5-2. Subpanel Assembly A1 Assembly Diagram

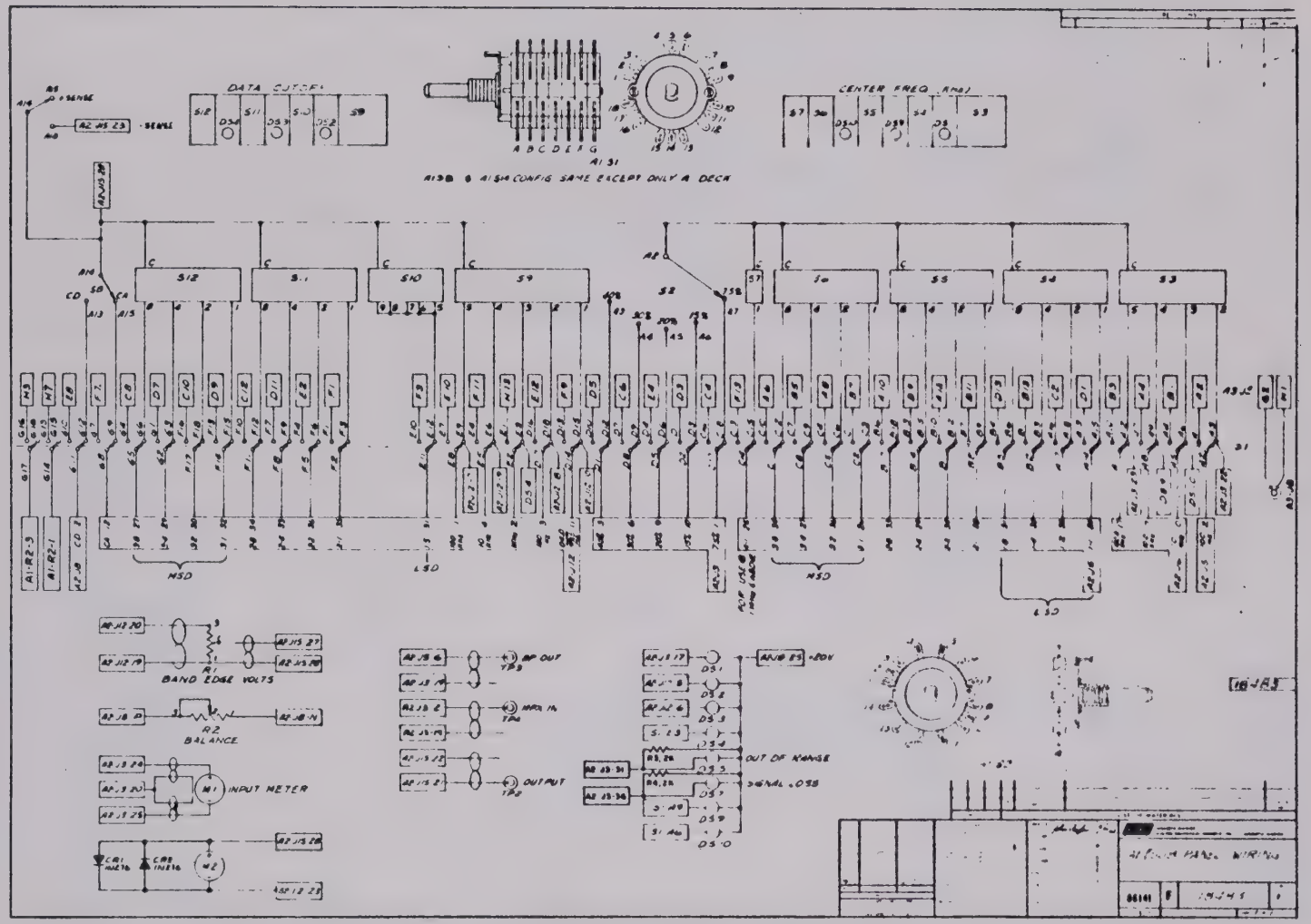

Figure 5-3. Subpanel Assembly A1 Wiring Diagram

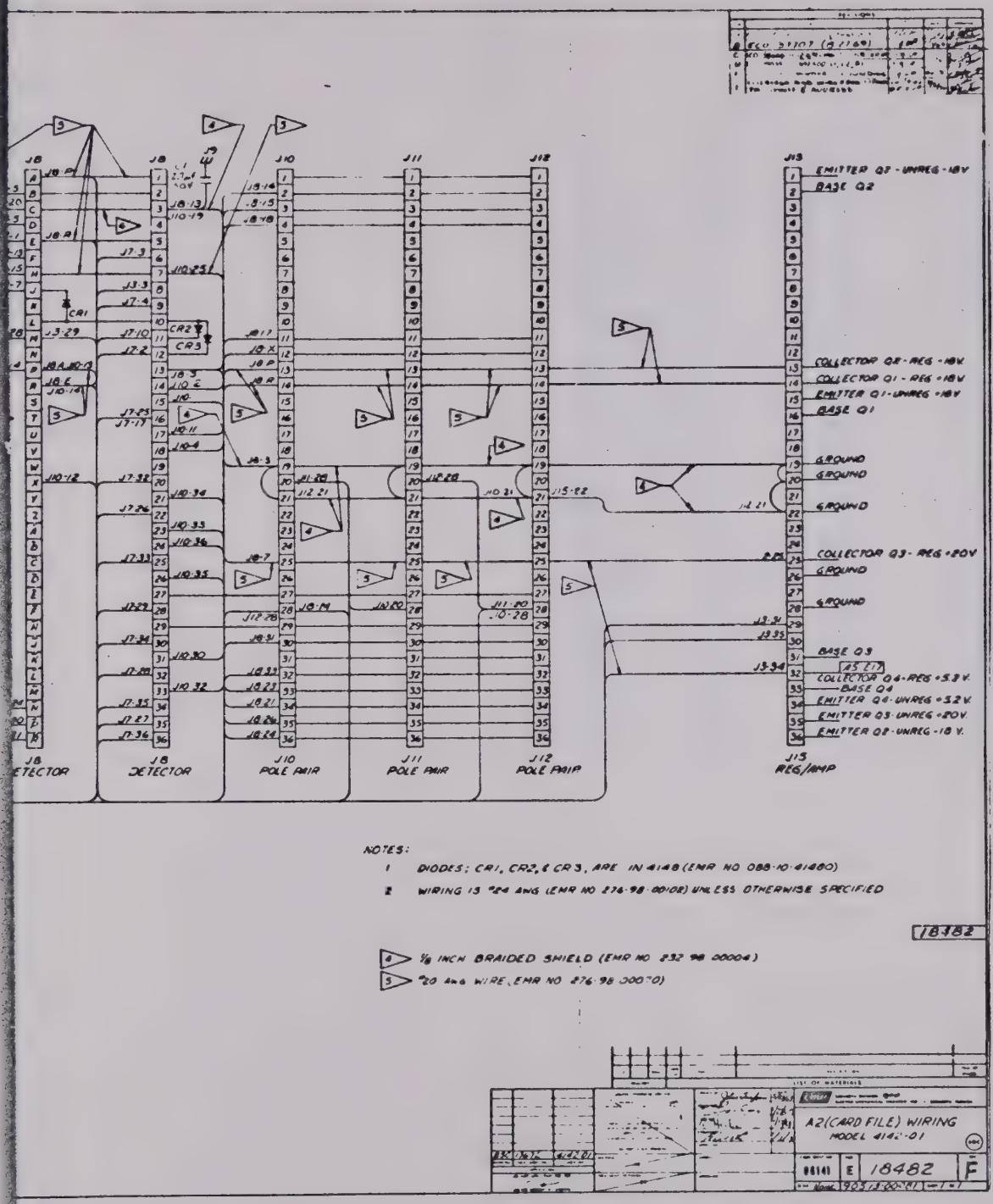

Figure 5-4 (Sht. 1 of 6). Card Chassis A2
Wiring Diagram (4142-01)

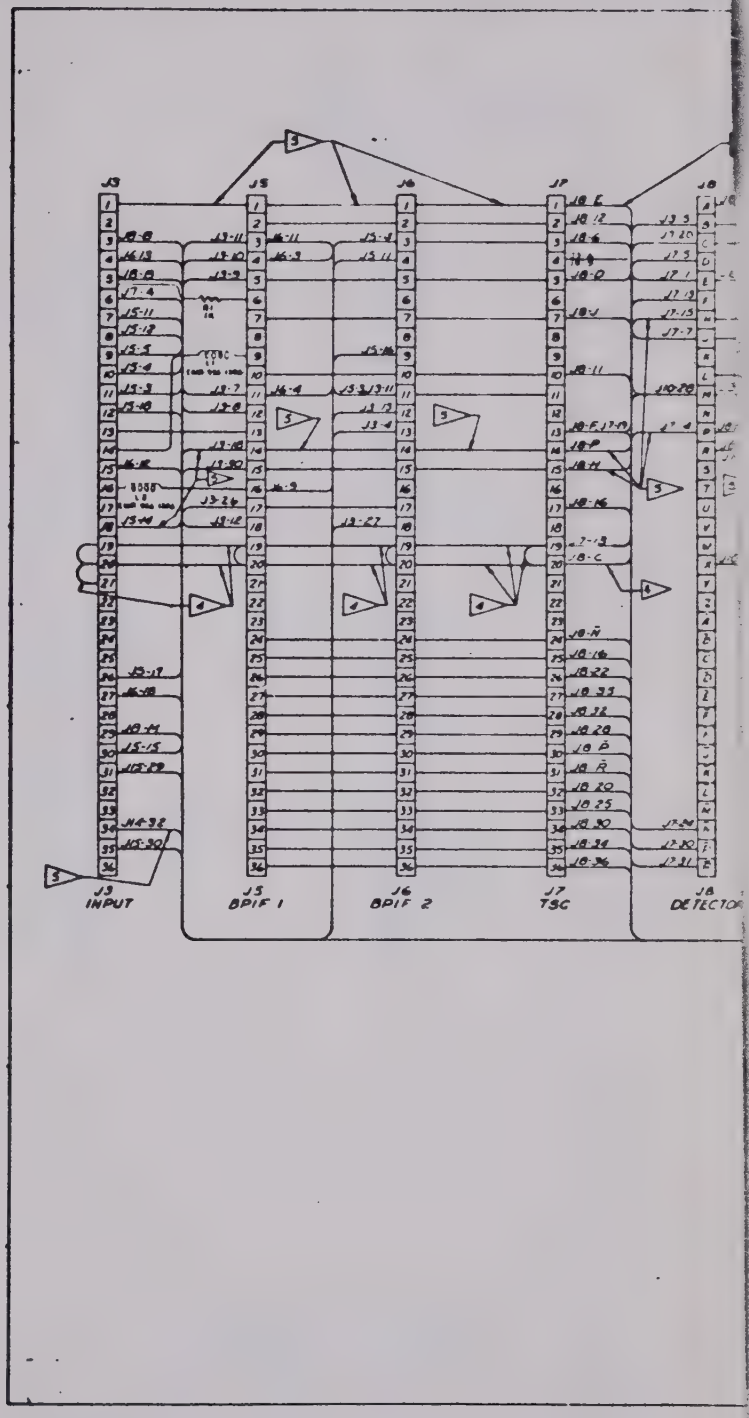
J5
J6
J7
J8
J9
INPUT
J5
BPIF 1
J6
BPIF 2
J7
TSC
J8
DETECTOR

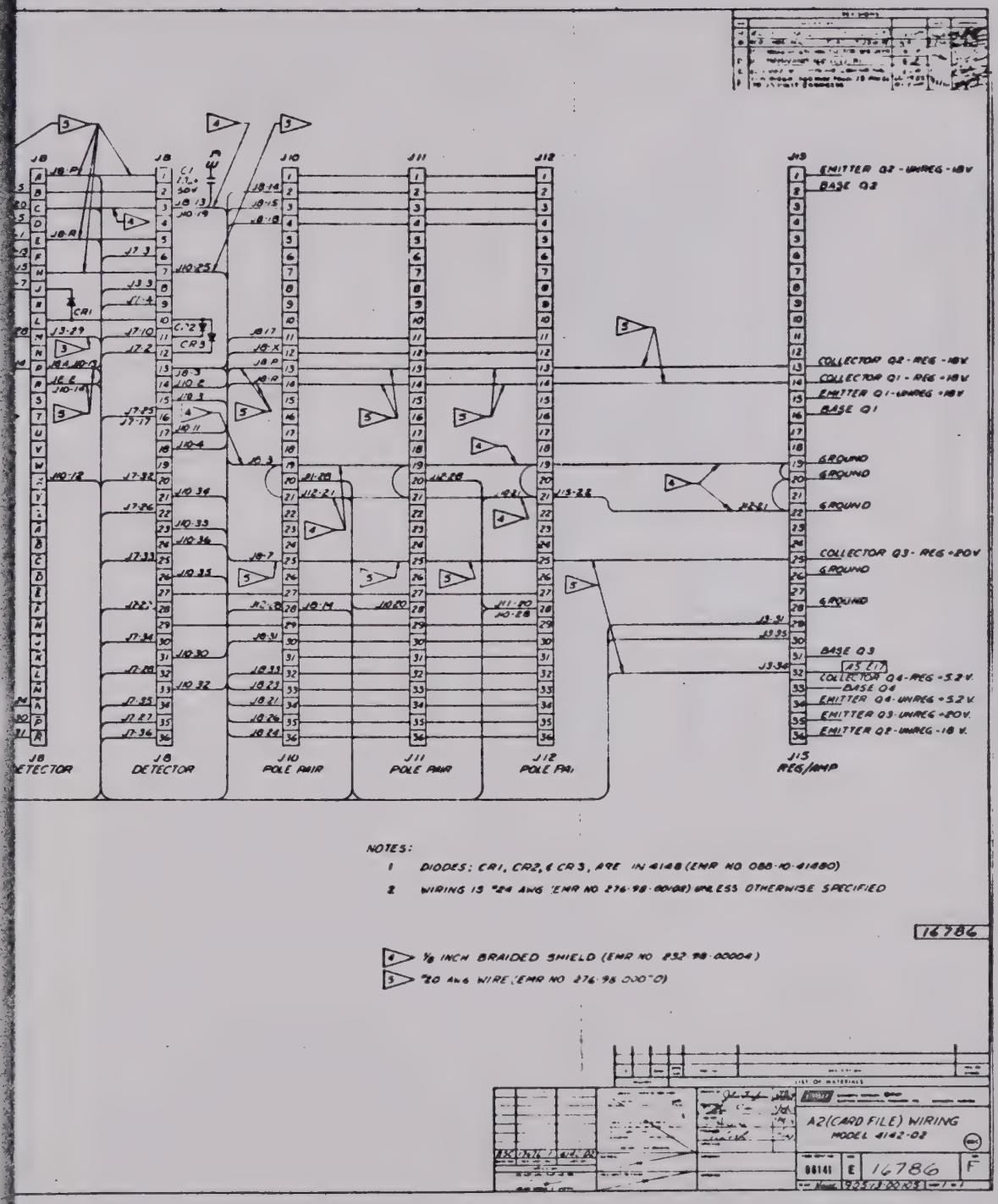

Figure 5-4 (Sht. 2 of 6). Card Chassis A2 Wiring Diagram (4142-02)

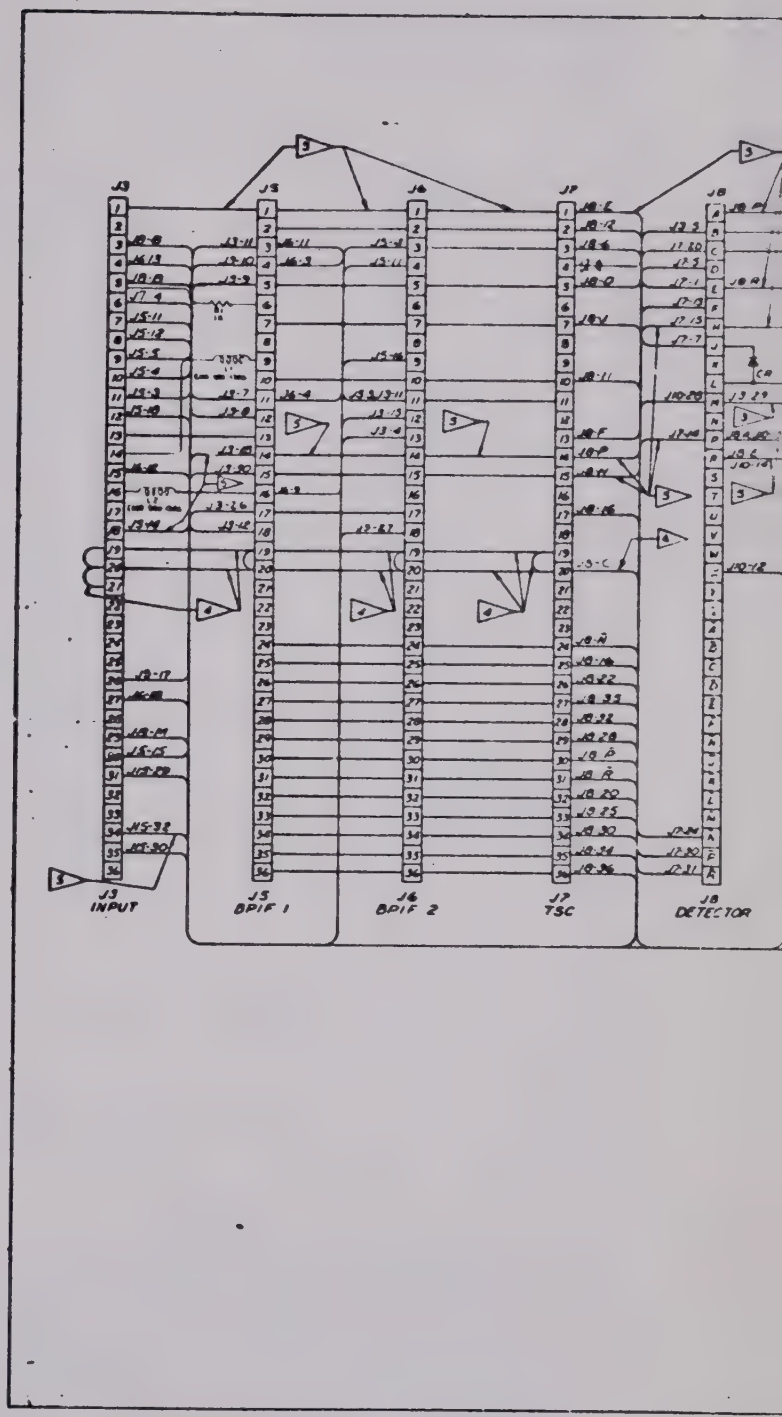
J3
INPUT
J5
BPIF 1
J6
BPIF 2
J7
TSC
J8
DETECTOR

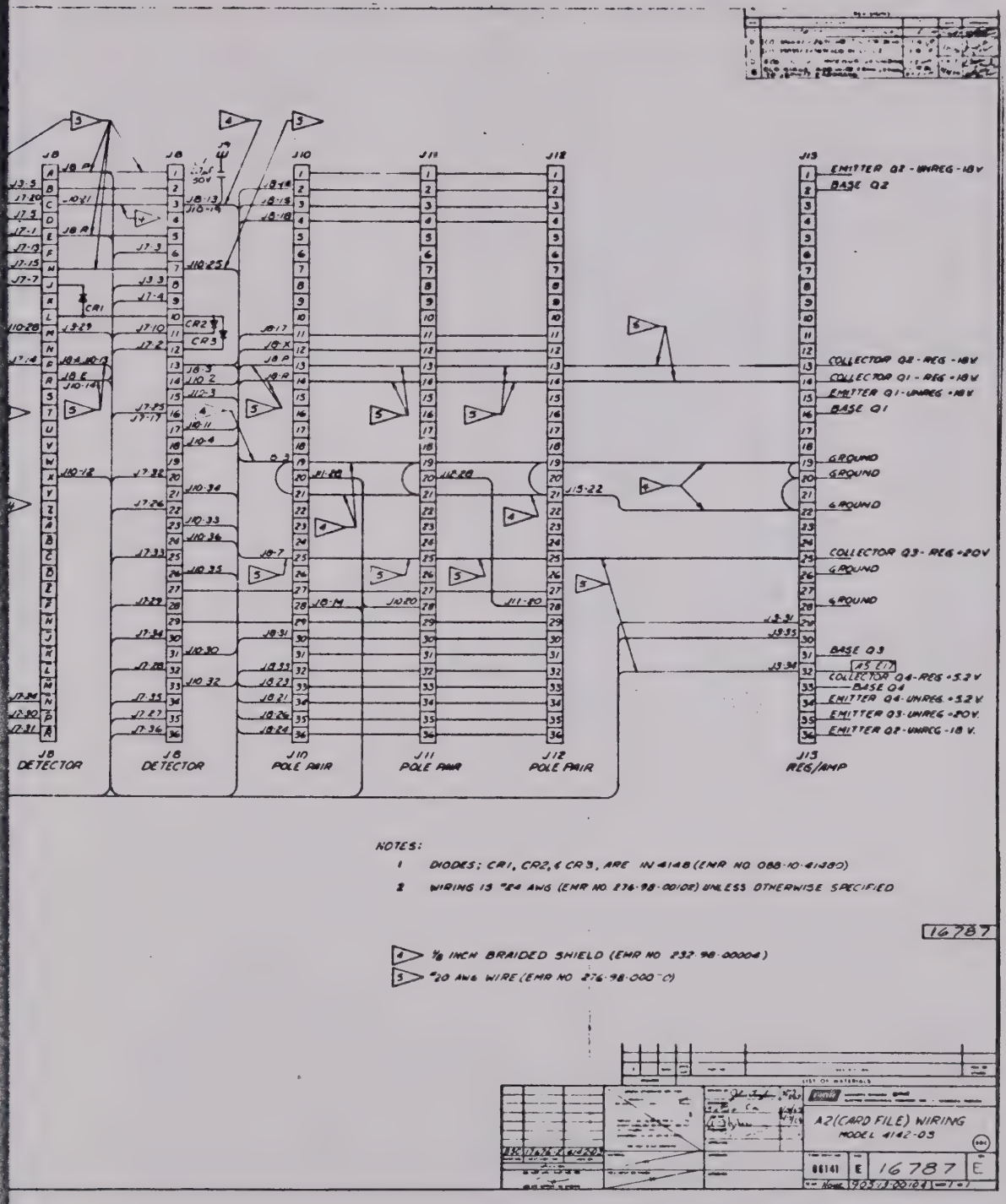

Figure 5-4 (Sht. 3 of 6). Card Chassis A2 Wiring Diagram (4142-03)

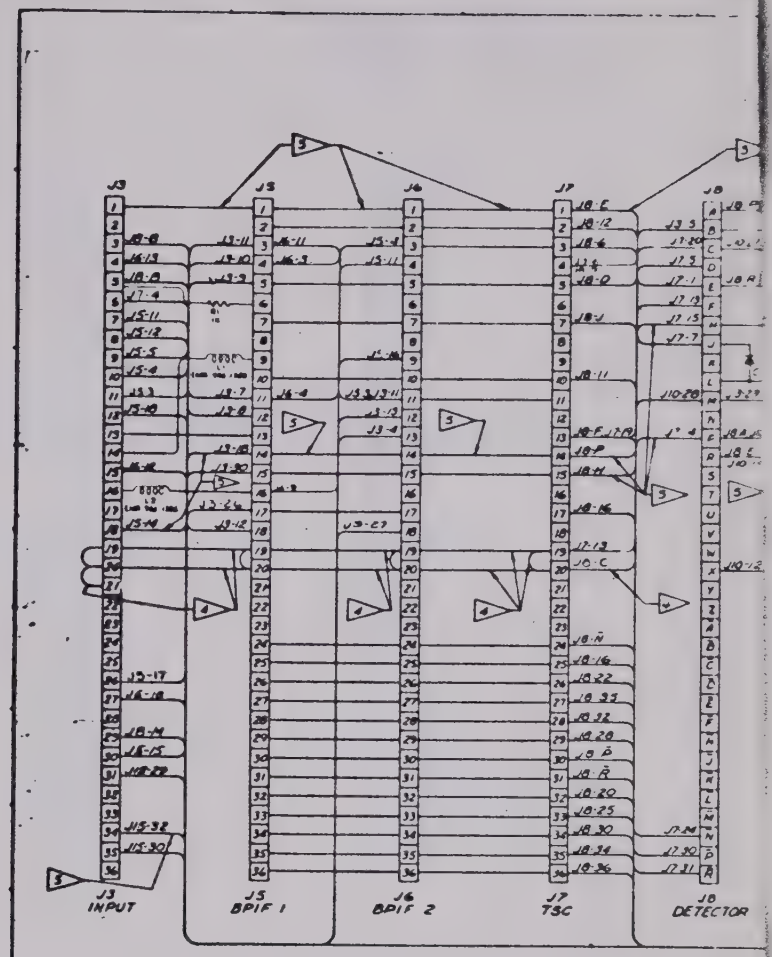
J3
INPUT
J5
BPIF 1
J6
BPIF 2
J7
TSC
J8
DETECTOR

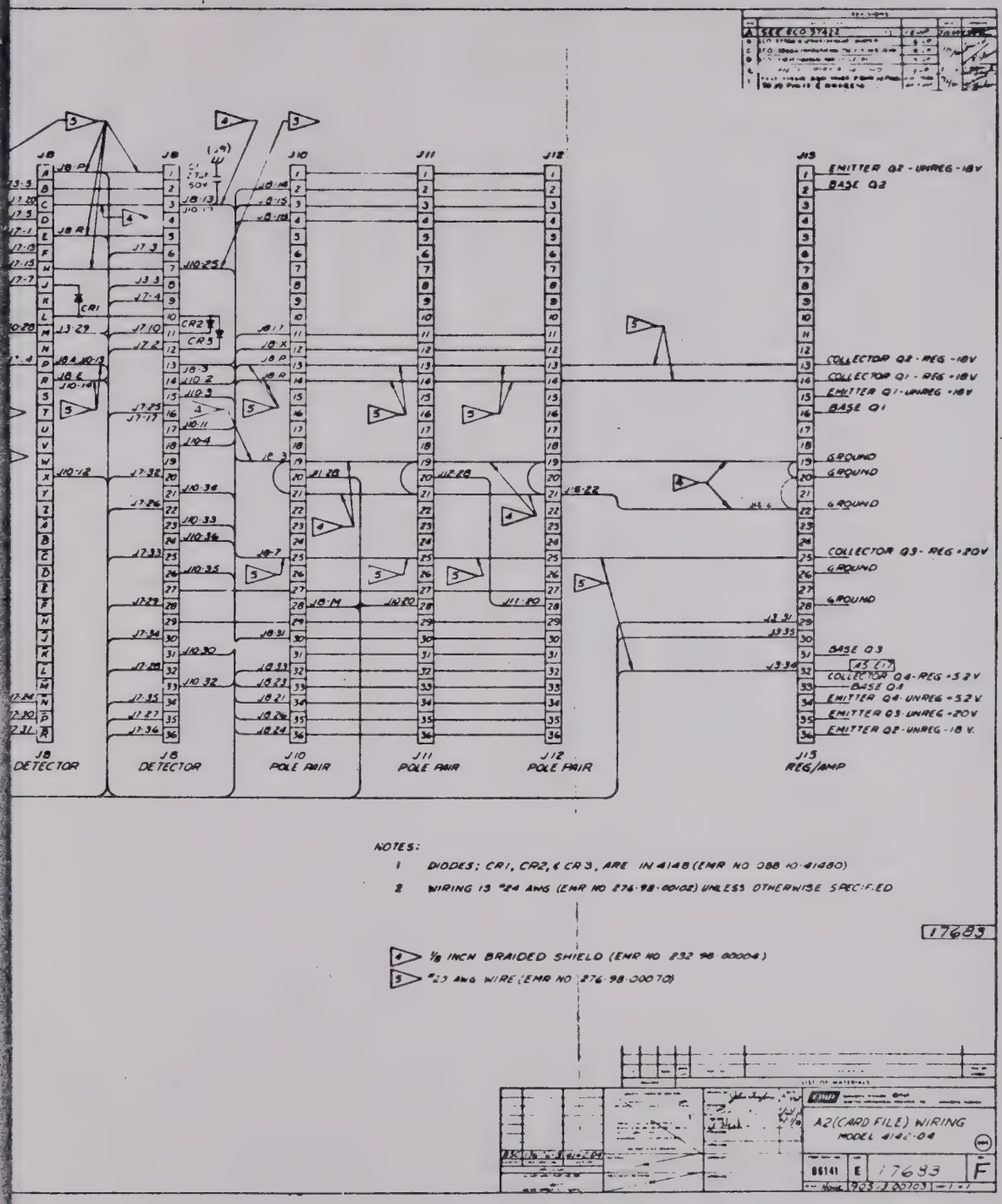

NOTES:

1. DIODES: CR1, CR2, & CR3, ARE IN4148 (EMR NO 288 10-41480)
2. WIRING IS #24 AWG (EMR NO 276-98-00102) UNLESS OTHERWISE SPECIFIED

17683

4 ⅛ INCH BRAIDED SHIELD (EMR NO 232 98 00004)

5 #23 AWG WIRE (EMR NO 276-98-00070)

Figure 5-4 (Sht. 4 of 6). Card Chassis A2 Wiring Diagram (4142-04)

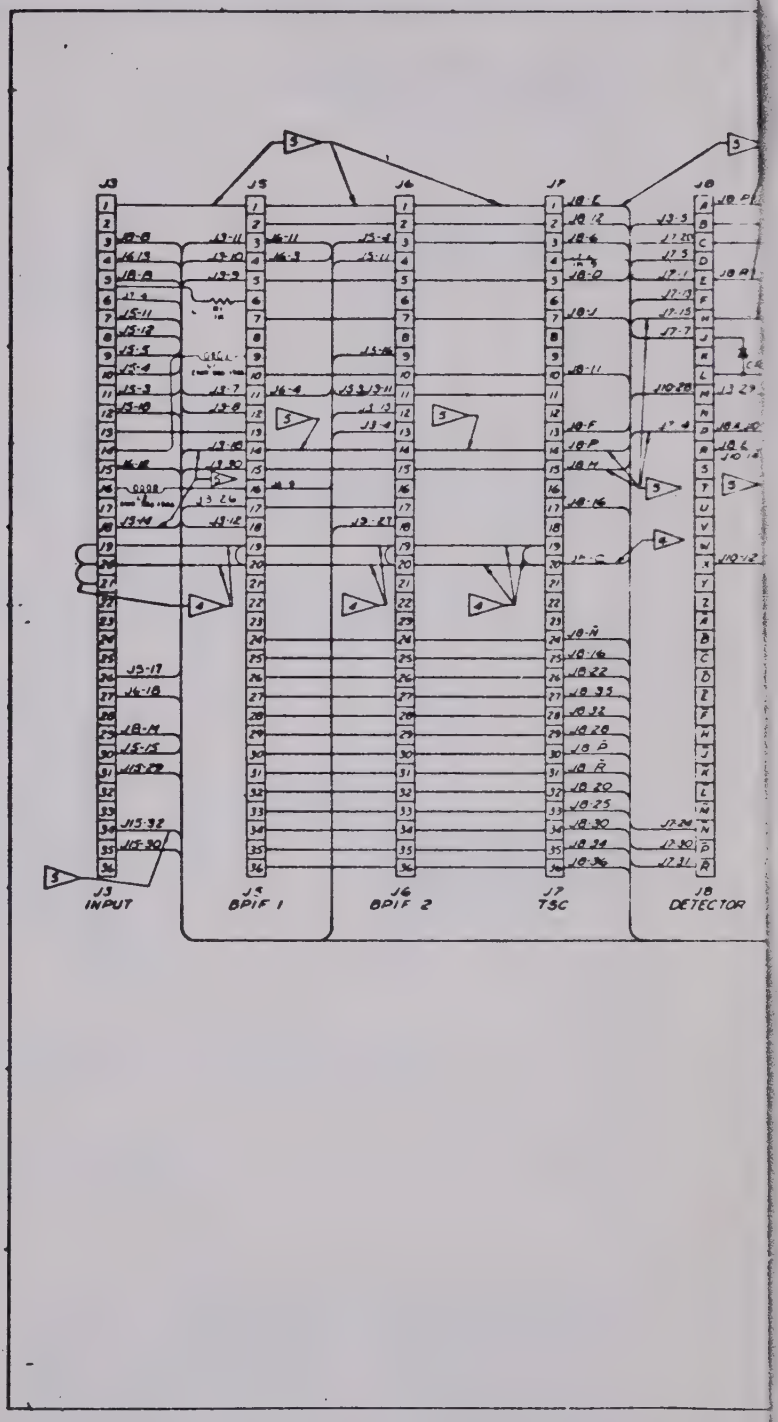
J3
INPUT
J5
BPIF 1
J6
BPIF 2
J7
TSC
J8
DETECTOR

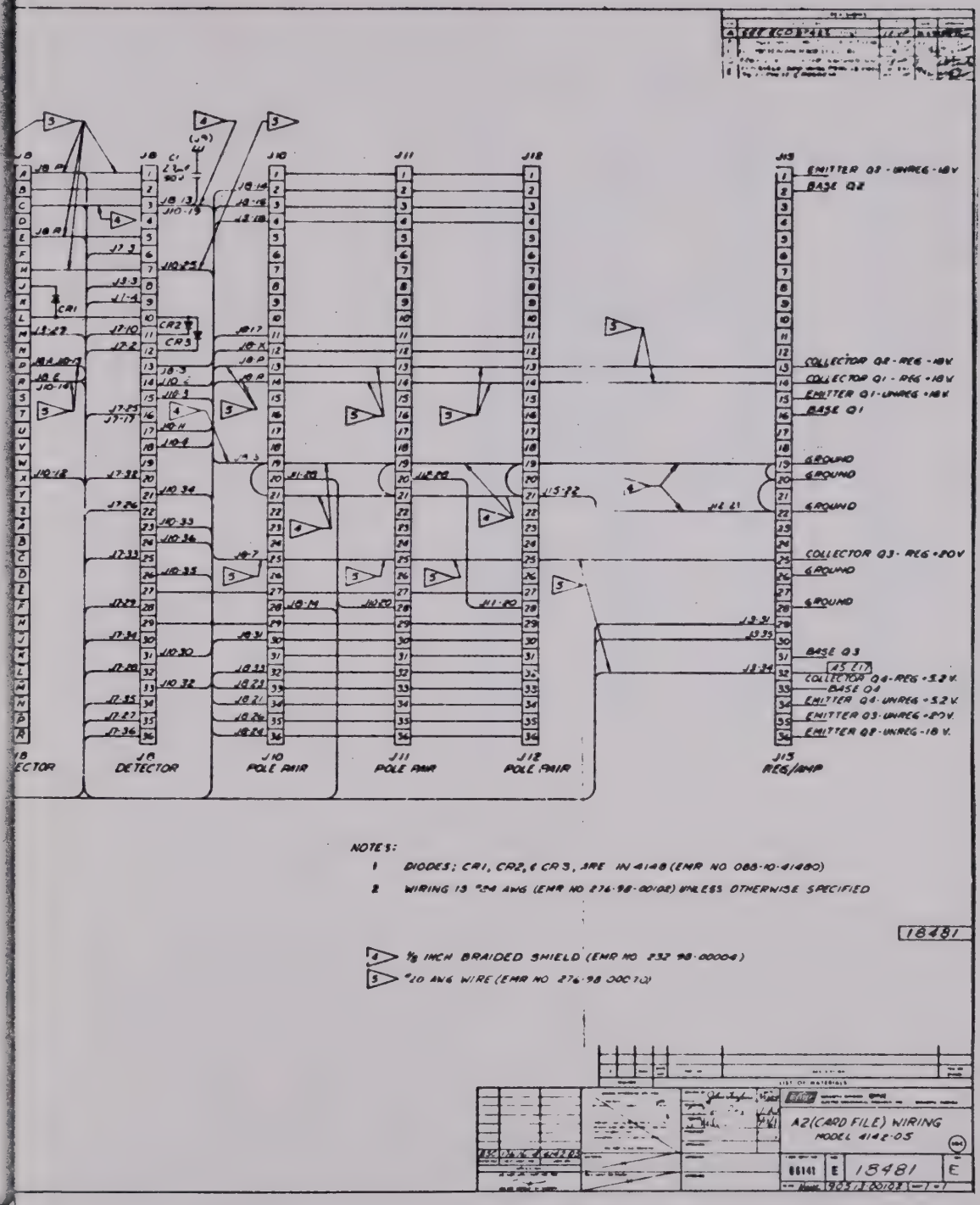

Figure 5-4 (Sht. 5 of 6). Card Chassis A2 Wiring Diagram (4142-05)

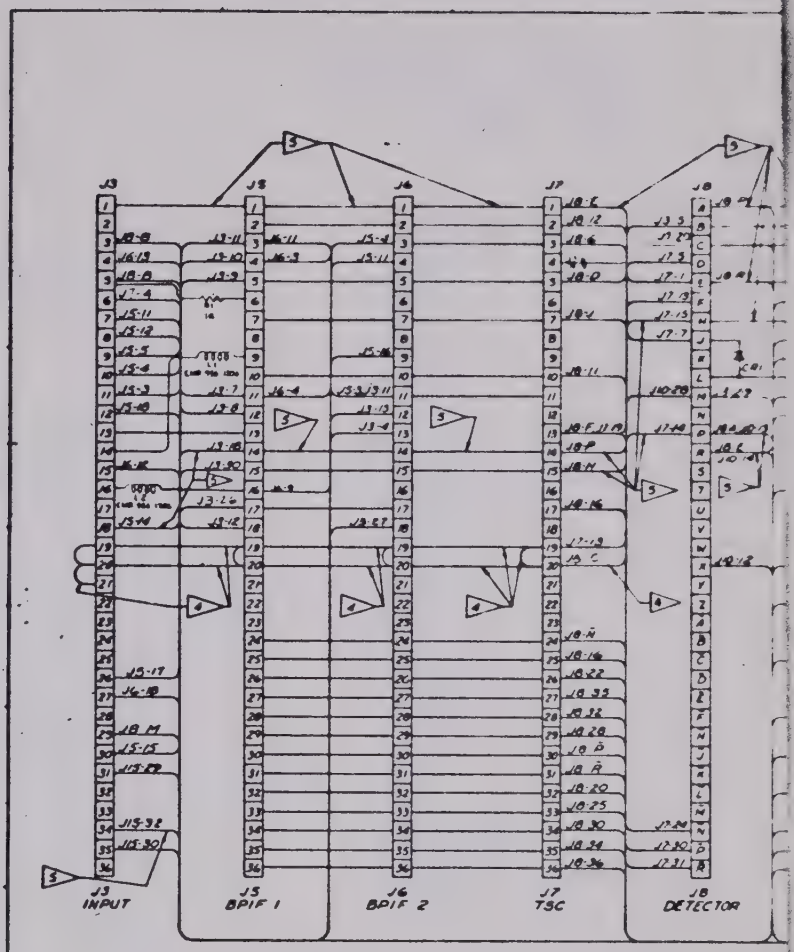
J3
INPUT
J5
BDIF 1
J6
BDIF 2
J7
TSC
J8
DETECTOR

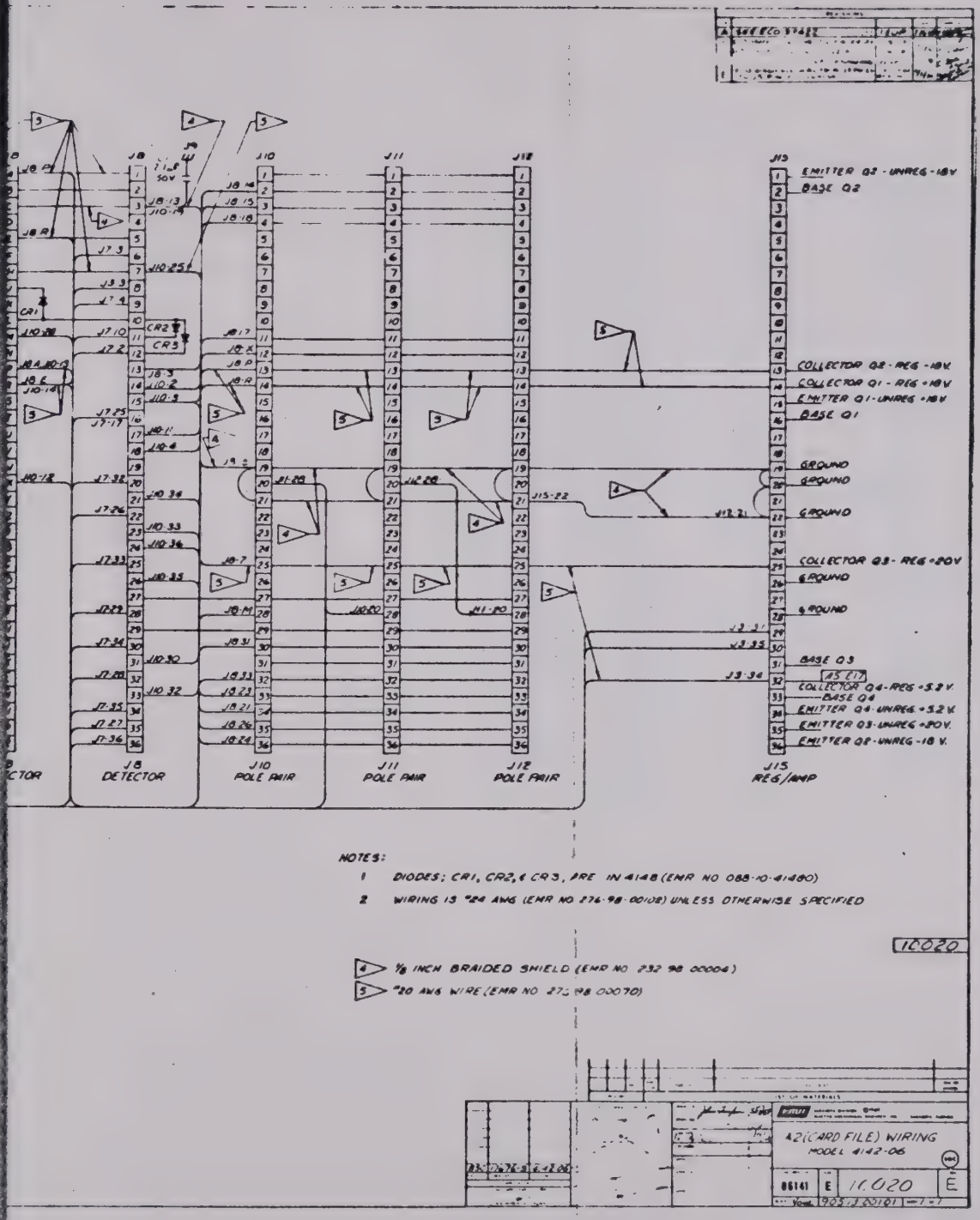

Figure 5-4 (Sht. 6 of 6). Card Chassis A2 Wiring Diagram (4142-05)

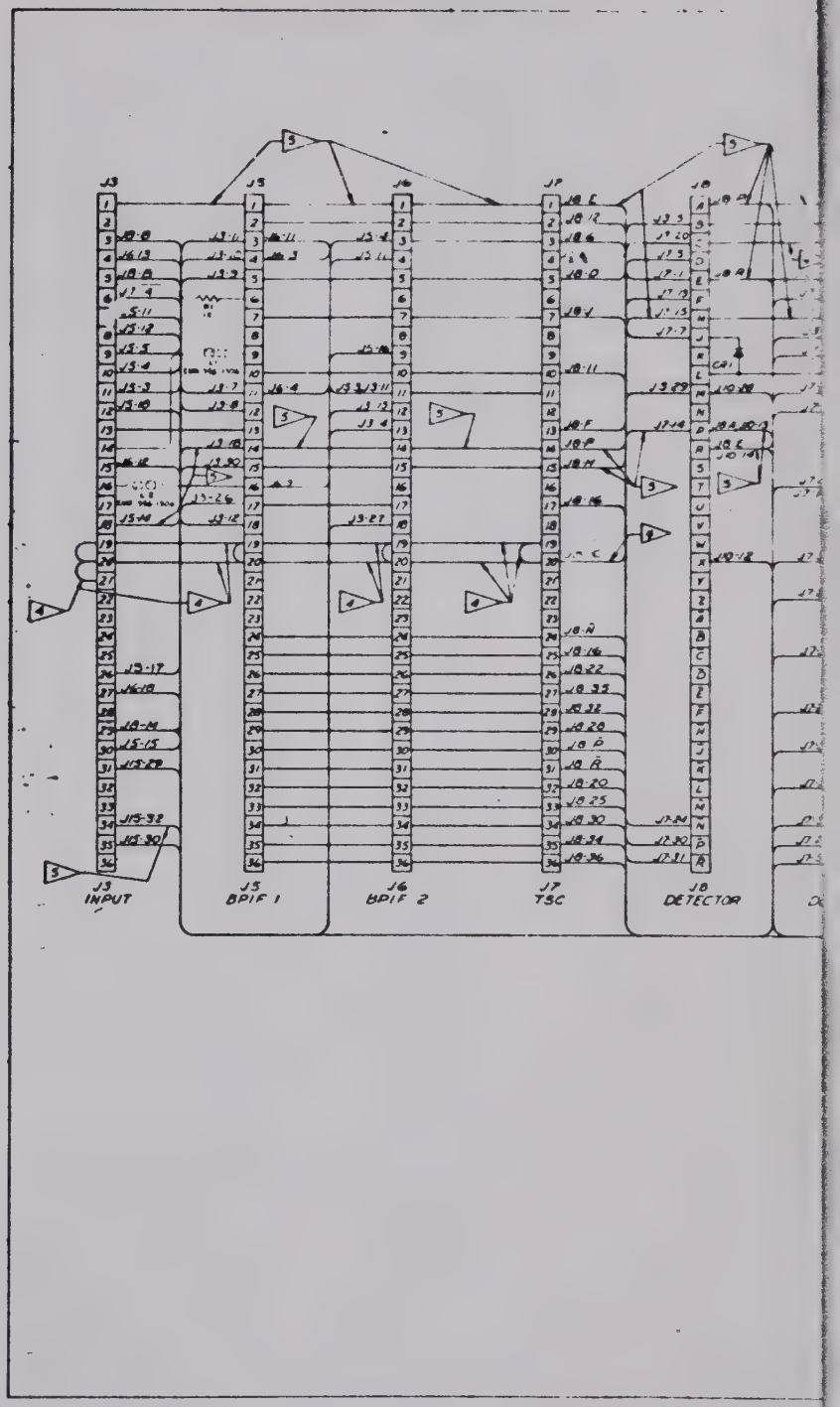
J3
INPUT
J5
BPIF 1
J6
BPIF 2
J7
TSC
J8
DETECTOR

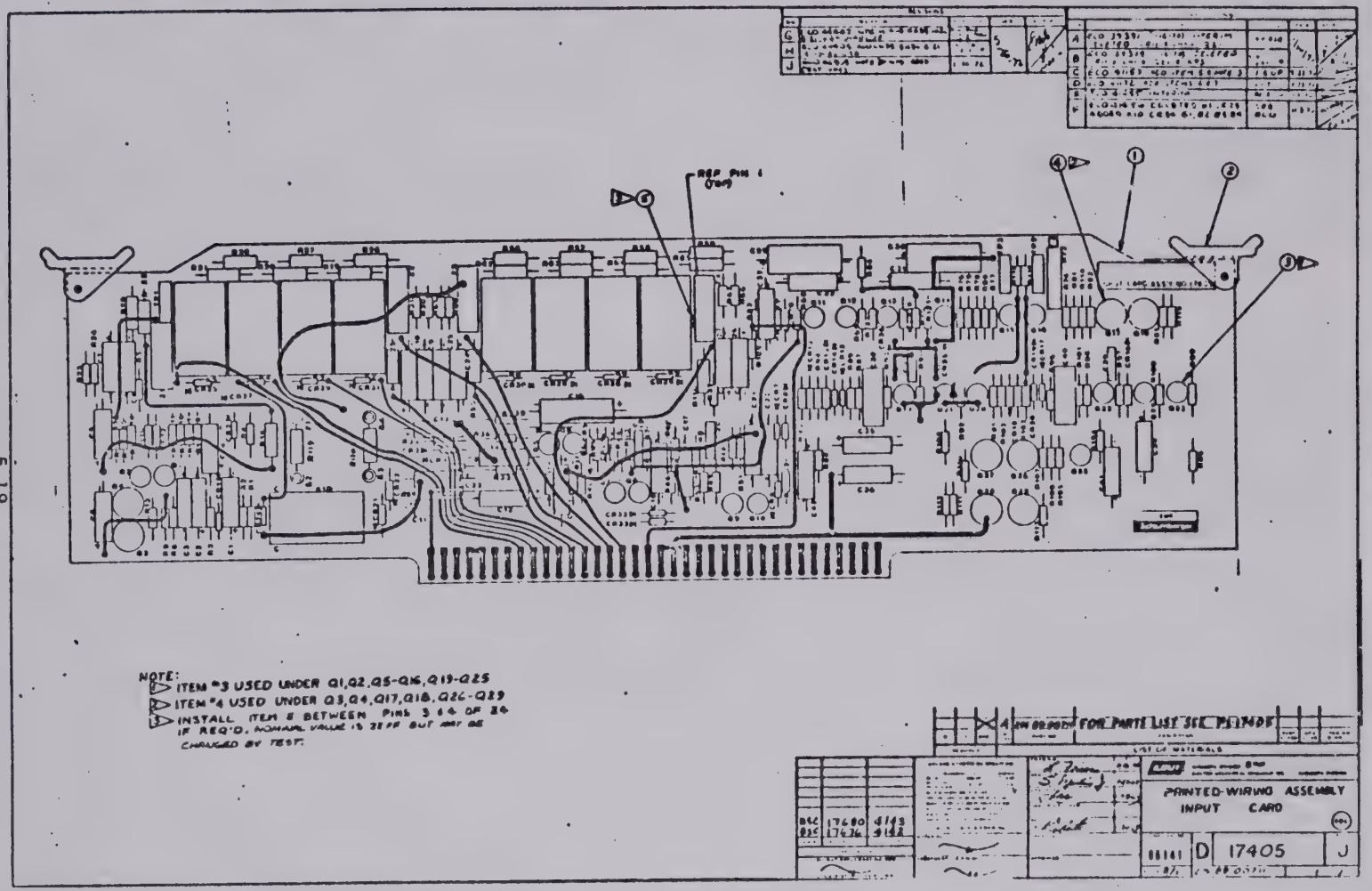

Figure 5-5. Input Card A2A3 Assembly Diagram

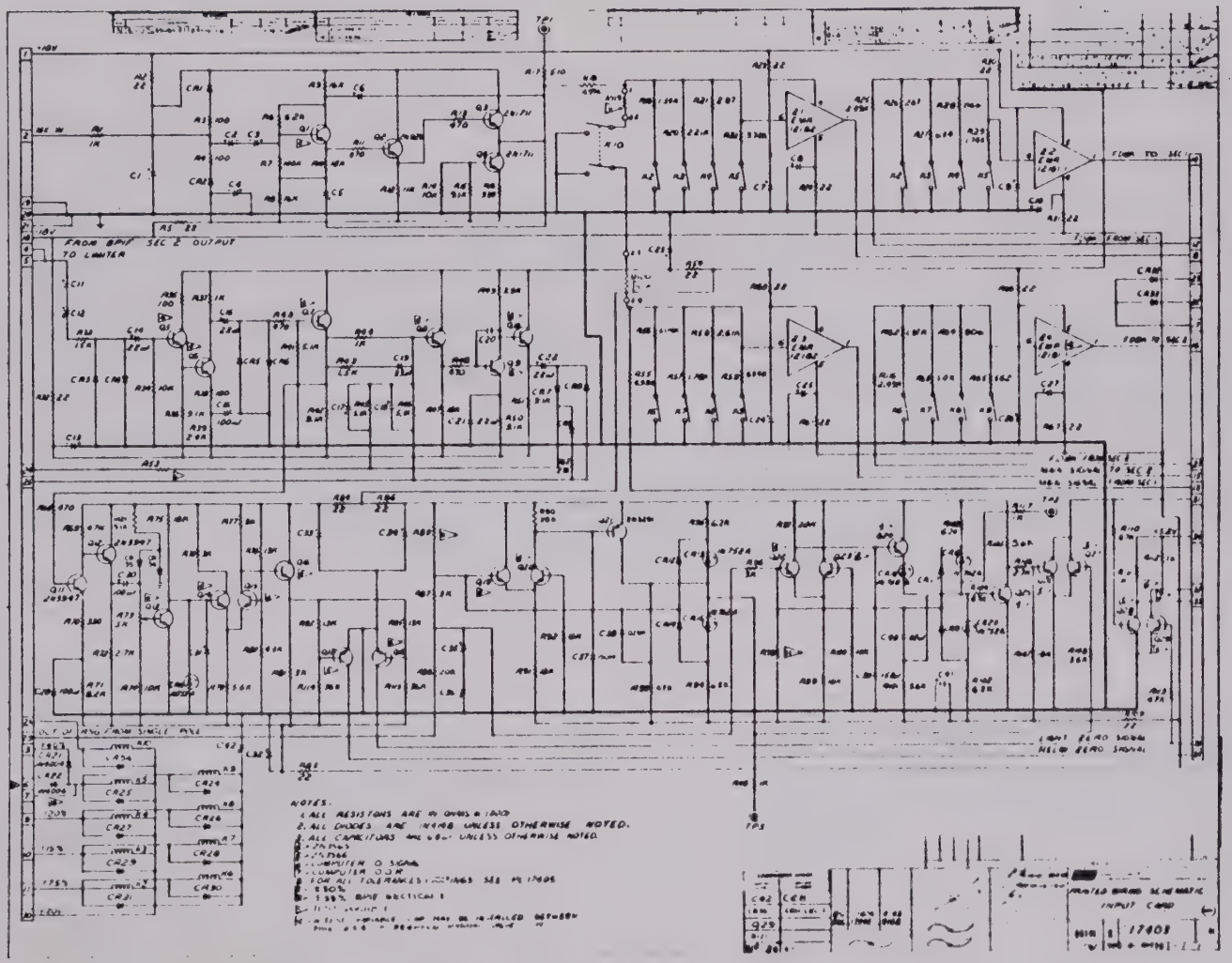

Figure 5-6. Input Card A2A3 Schematic Diagram

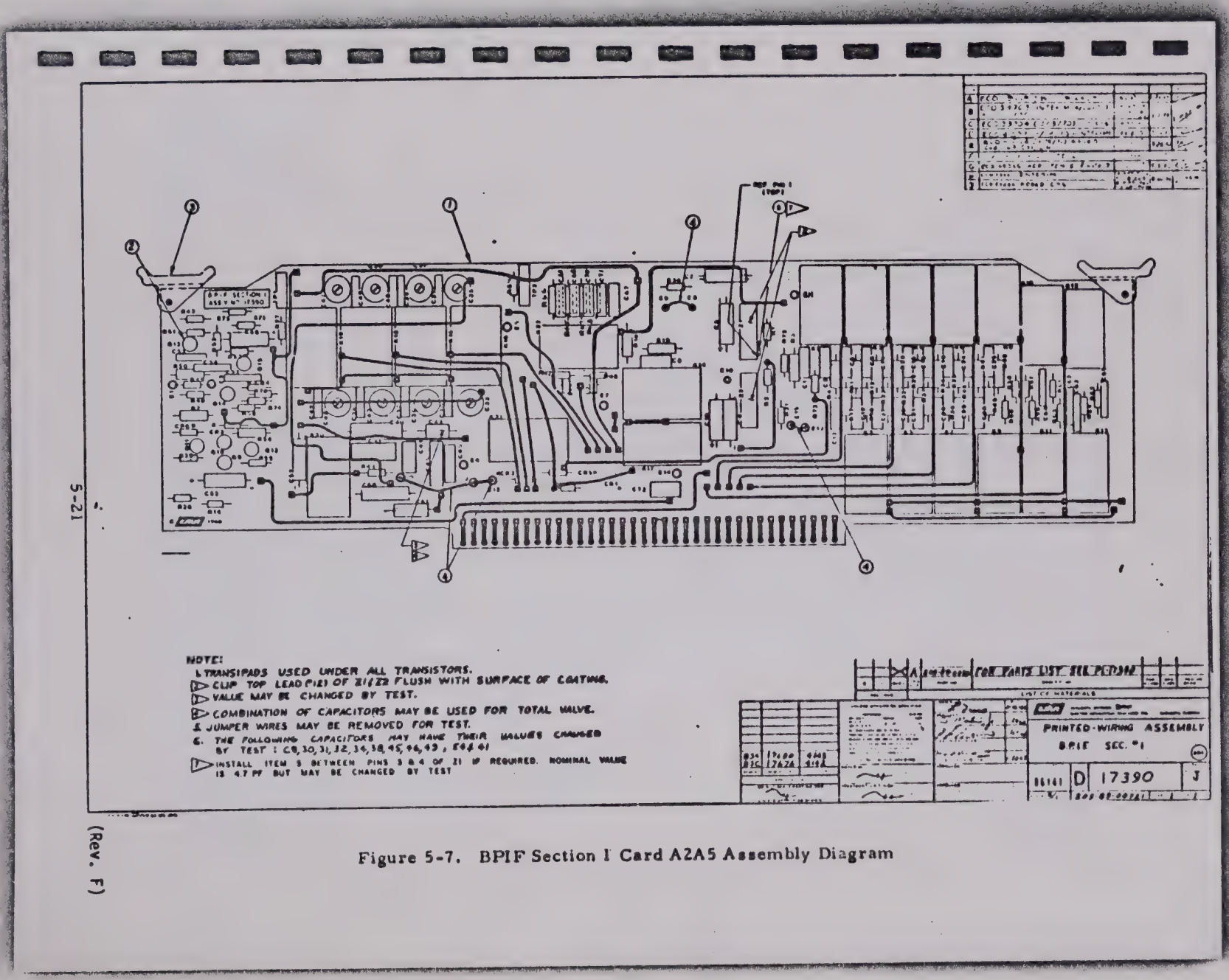

Figure 5-7. BPIF Section I Card A2A5 Assembly Diagram

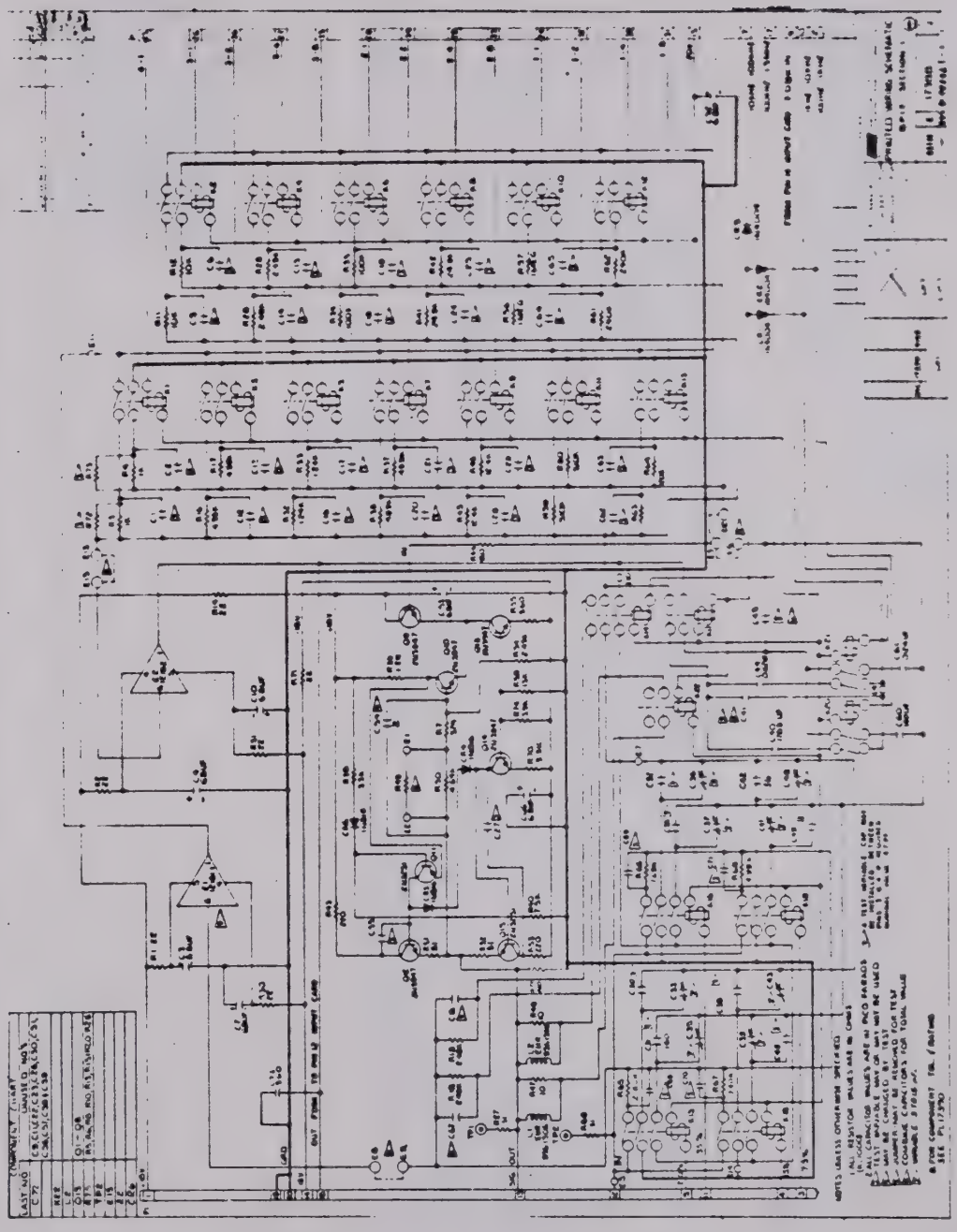

Figure 5-8. BPIF Section 1 Card A2A5 Schematic Diagram

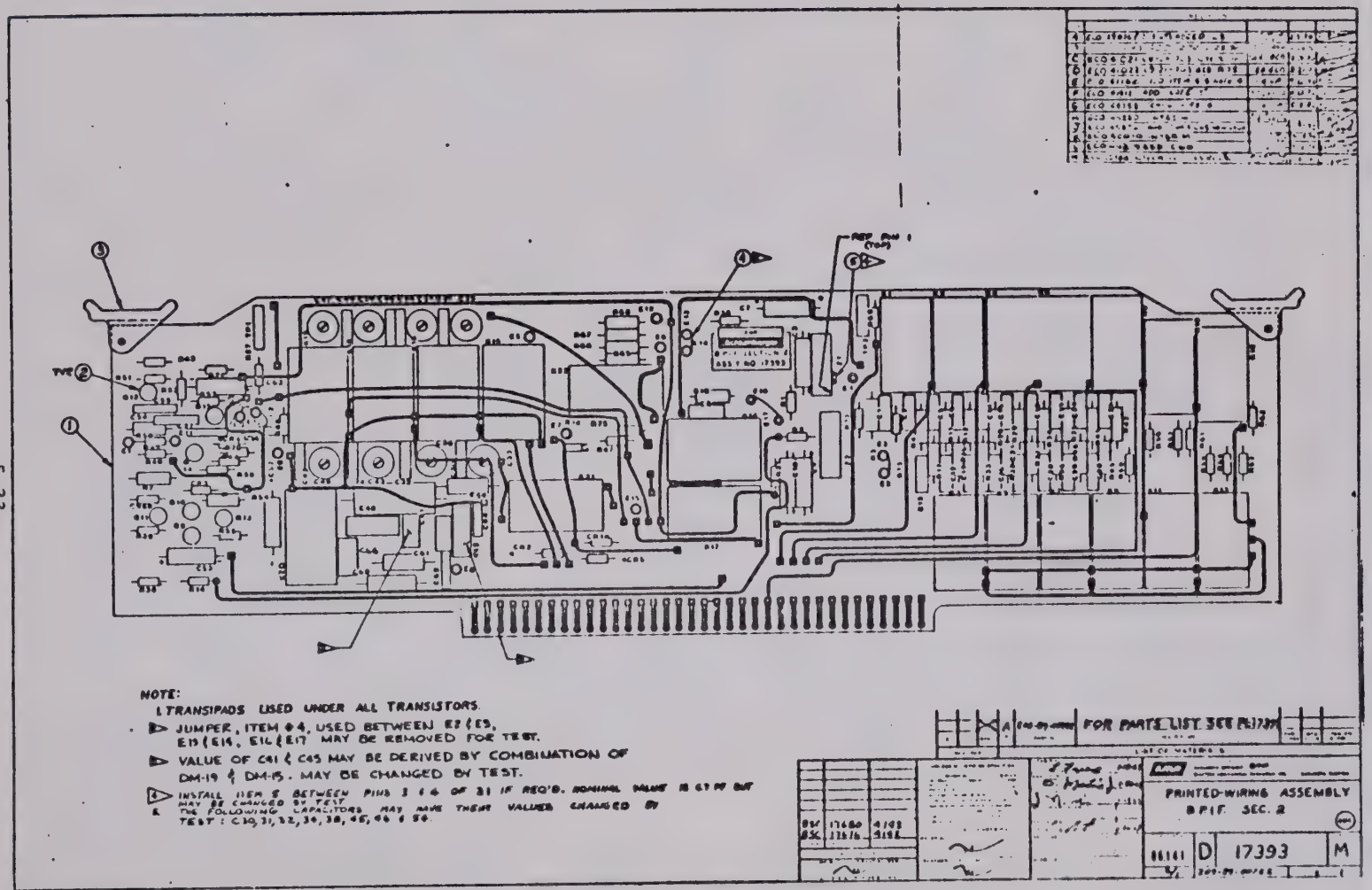

Figure 5-9. BPIF Section 2 Card A2A6 Assembly Diagram

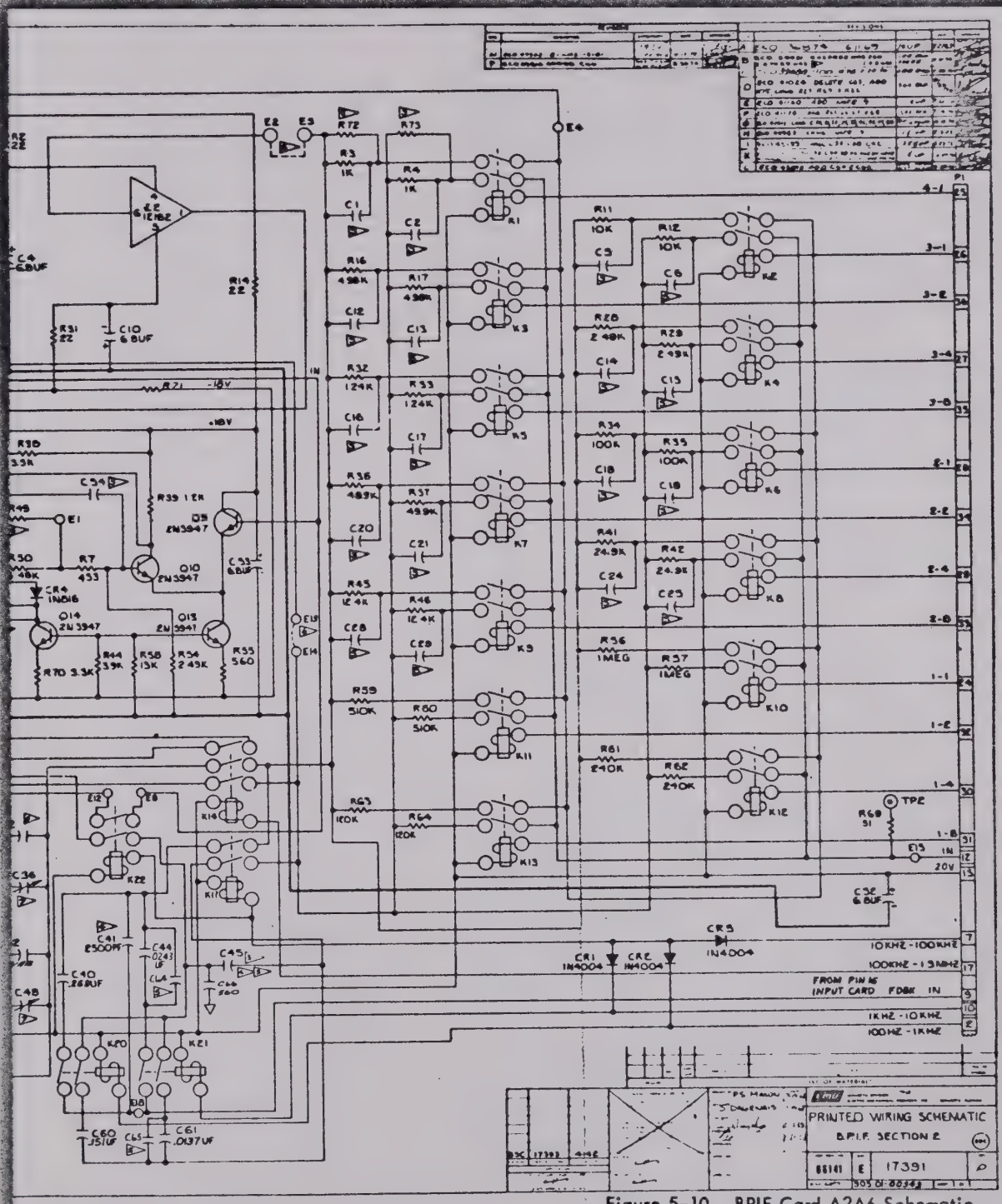

Figure 5-10. BPIF Card A2A6 Schematic Diagram

COMPONENT CHART	
LAST NO.	UNUSED NO'S
C66	C22-C29, C8, C11, C26, C56-C58
CR6	
K20	
L3	
Q15	Q1-Q8
R78	R5, R6, R8-R10, R13, R15, R20-R26
	R18
E18	
Z2	
TP2	

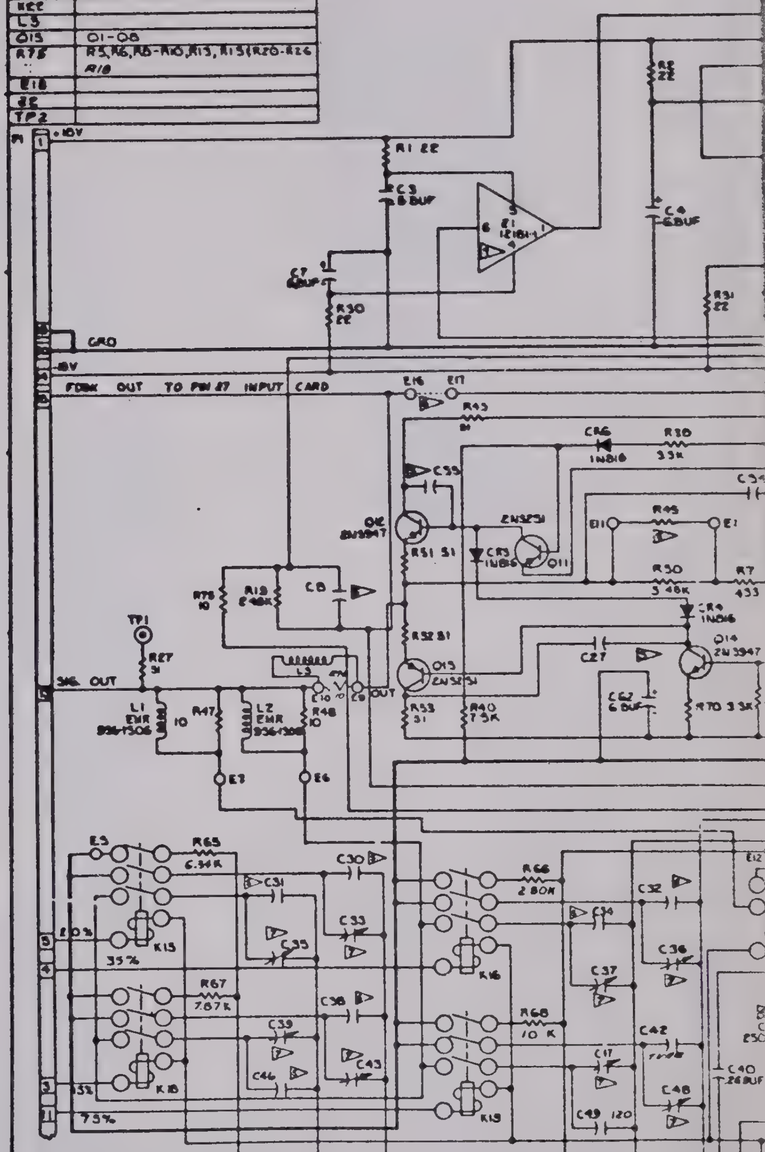

NOTES UNLESS OTHERWISE SPECIFIED

1. ALL RESISTOR VALUES ARE IN OHMS (K=1000)
2. ALL CAPACITOR VALUES ARE IN PICO FARADS.
3. MAY BE CHANGED BY TEST.
4. COMBINE CAPACITORS FOR TOTAL VALUE.
5. VALUE TO BE DETERMINED AT TEST, MAY OR MAY NOT BE USED.
6. JUMPER-MAY BE REMOVED FOR TEST.
7. VARIABLE 3 TO 15 pF.
8. FOR COMPONENT TOL. & RATING SEE PL-17393.
9. A TEST VARIABLE CAP. MAY BE INSTALLED BETWEEN PINS 3 & 4 IF REQUIRED NOMINAL VALUE 4.7PF.

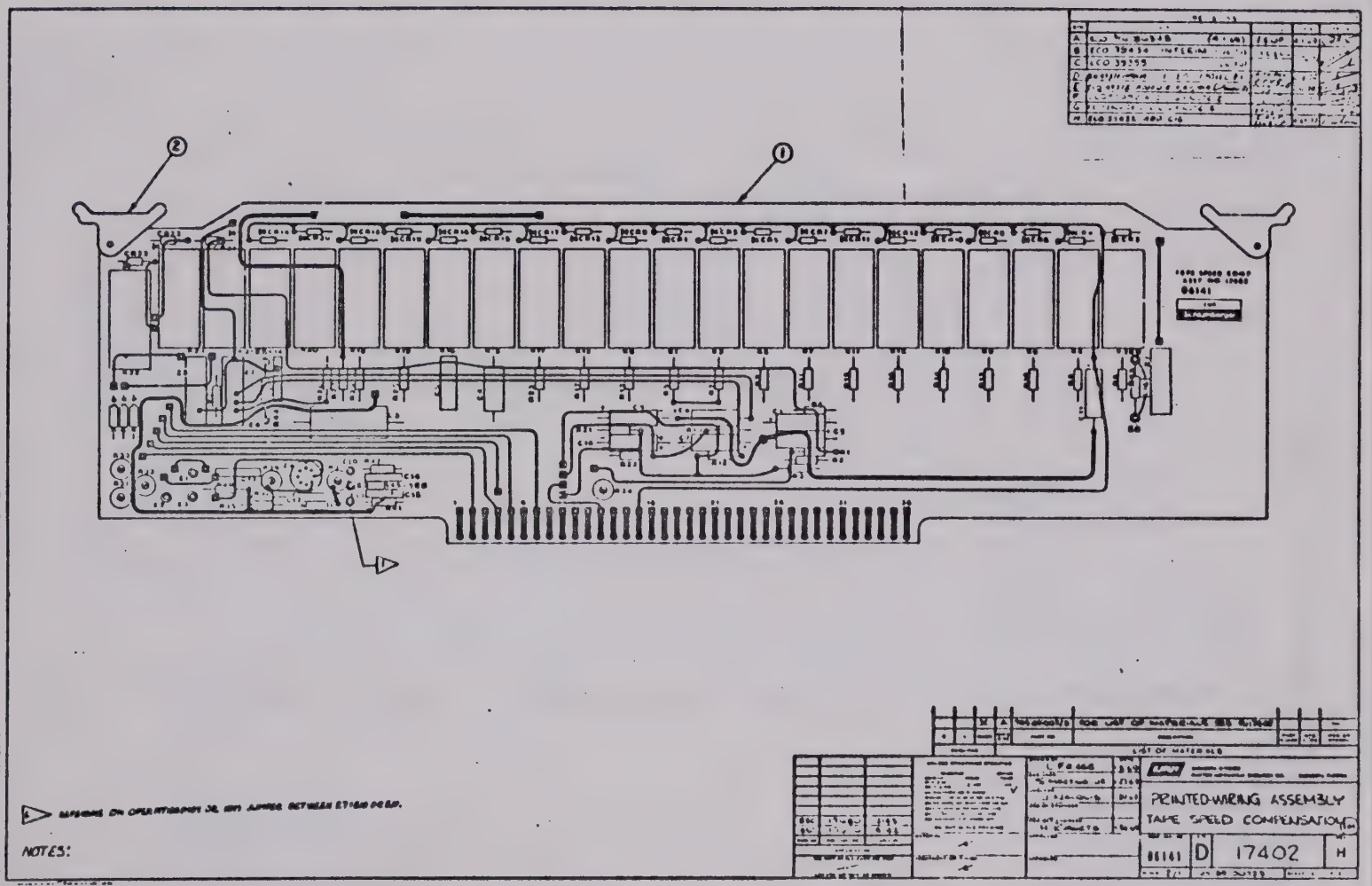

Figure 5-11. TSC Card A2A7 Assembly Diagram

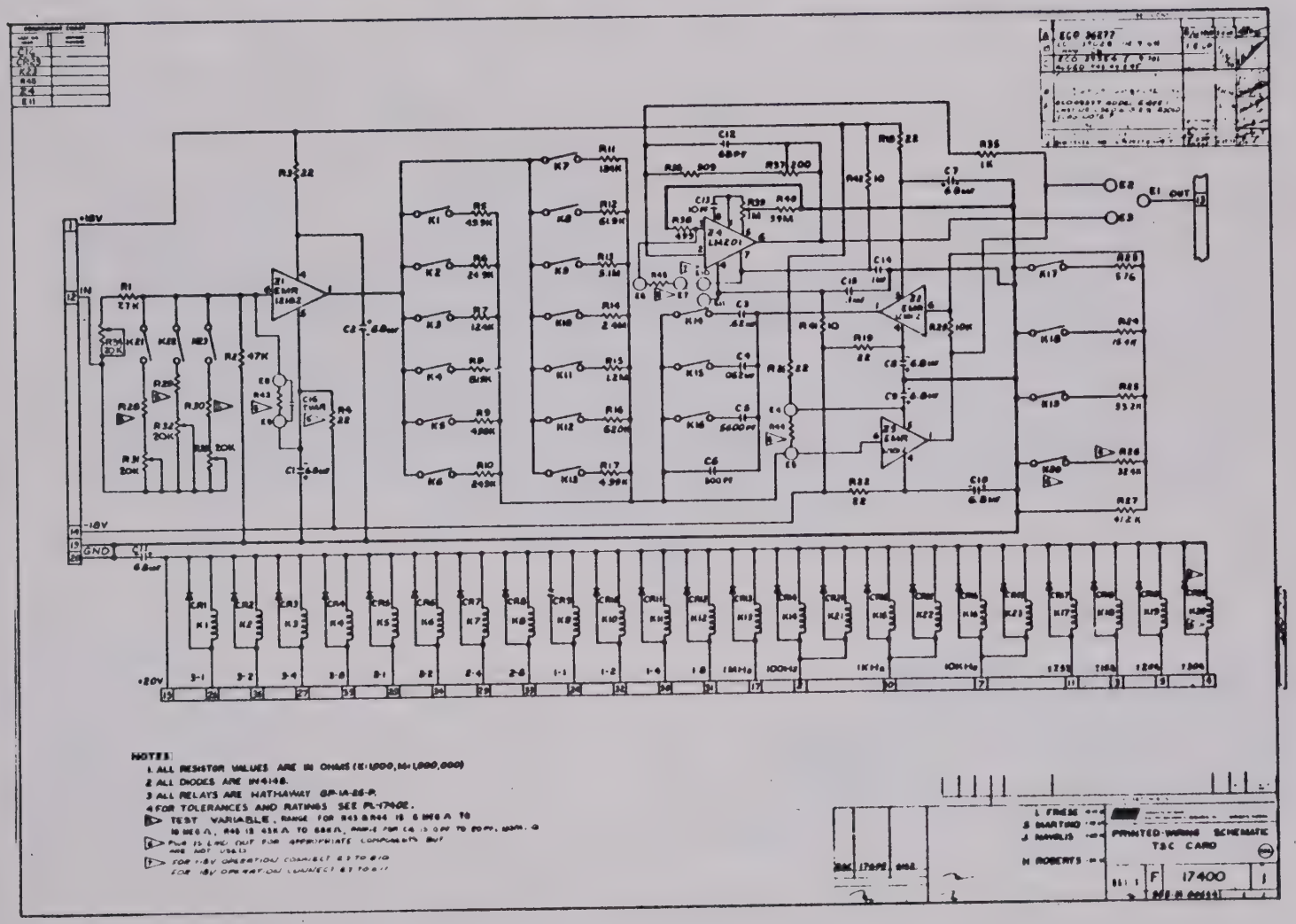

Figure 5-12. TSC Card A2A7 Schematic Diagram

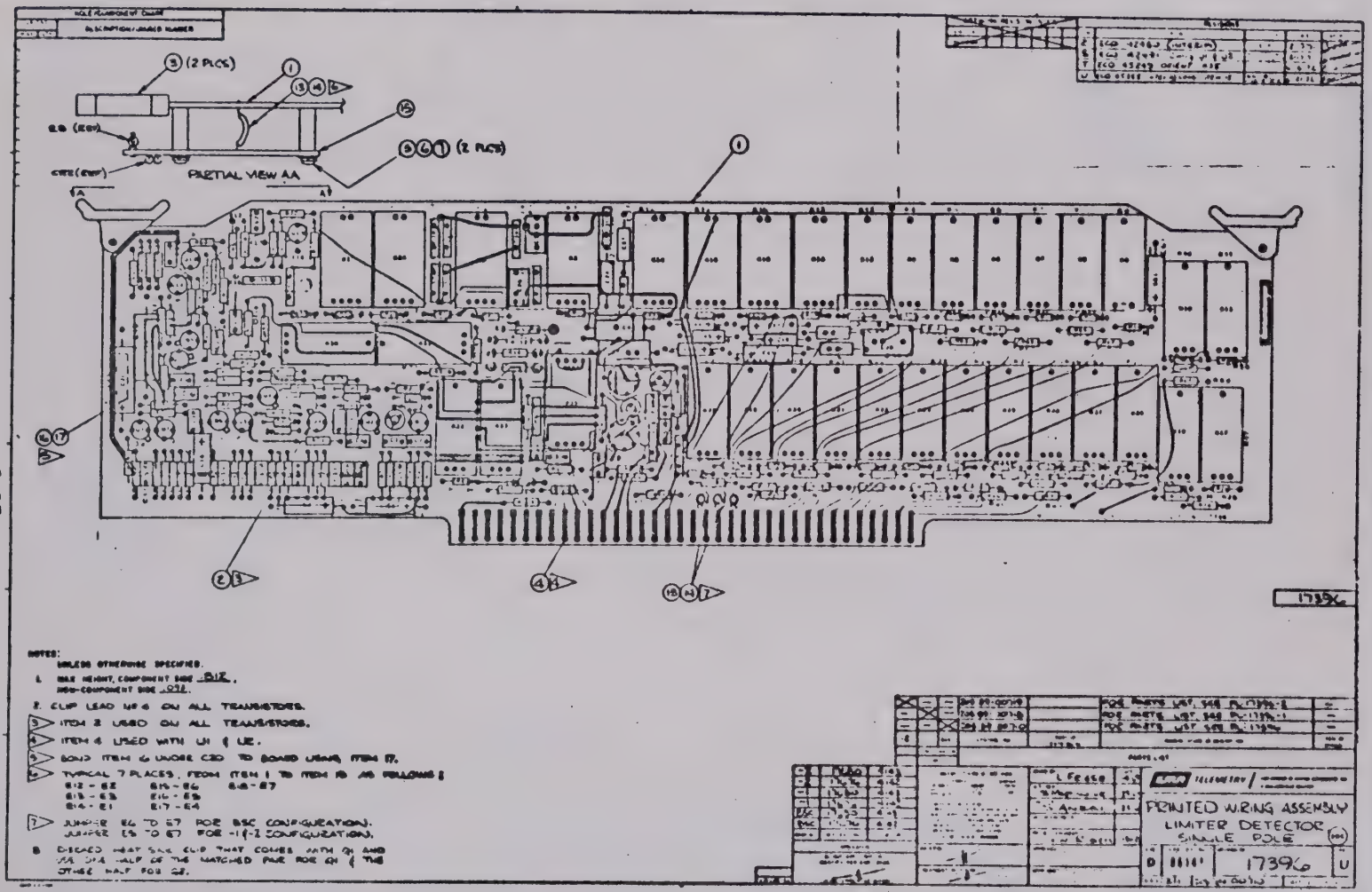

Figure 5-13. Limiter, Detector, and Single Pole Card A2A8 Assembly Diagram

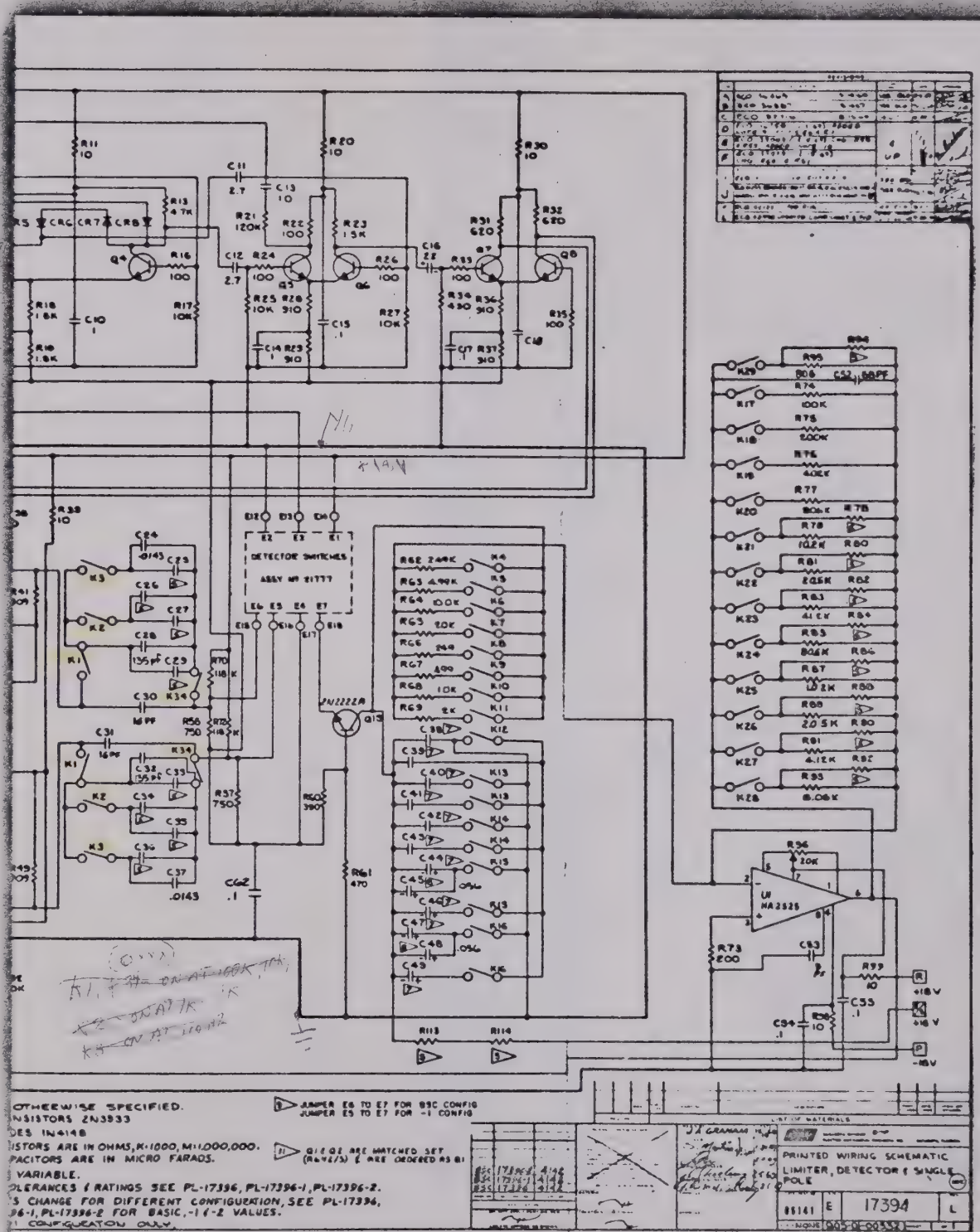

Figure 5-14. Limiter, Detector, and Single Pole Card A2A8 Schematic Diagram

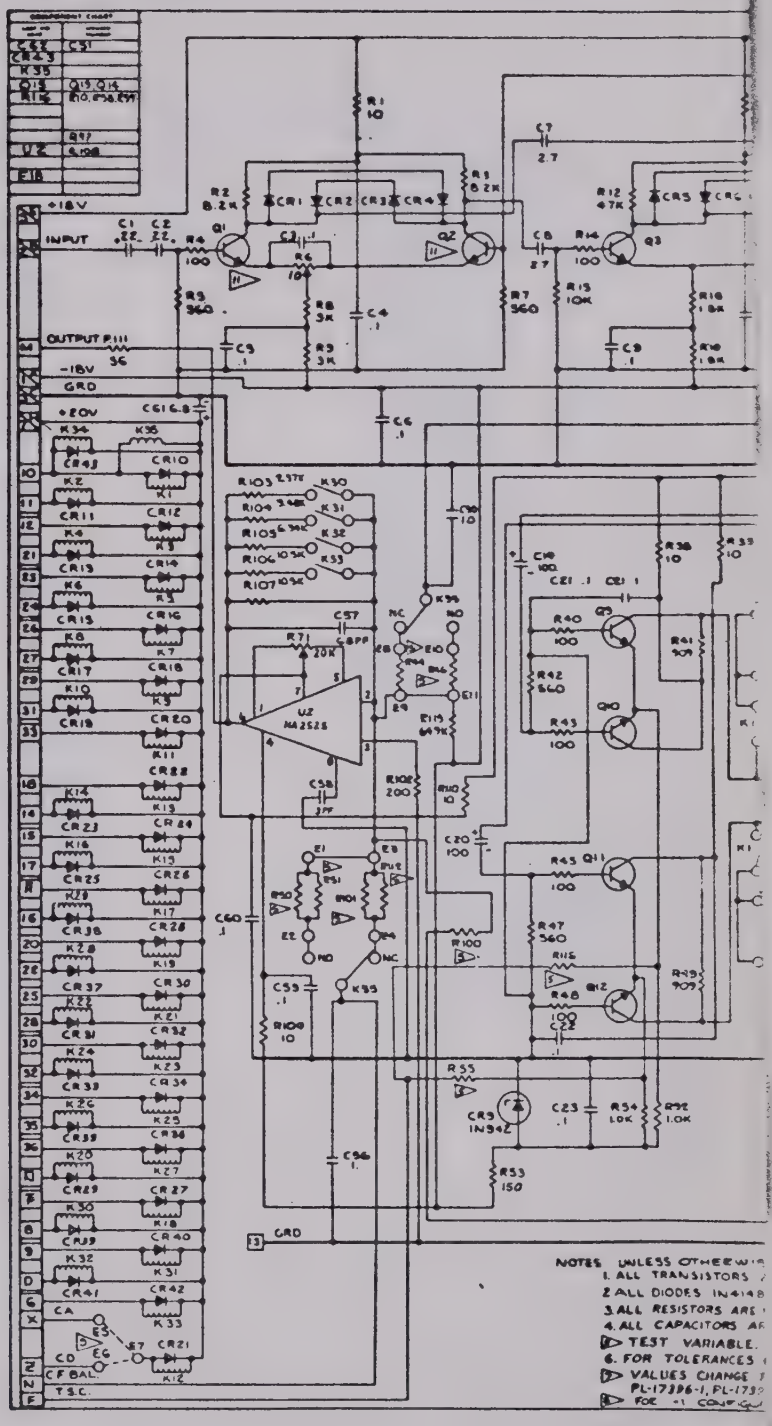

+18V
INPUT
OUTPUT
-18V
GRD
+20V
CF BAL.
T.S.C.
NOTES UNLESS OTHERWI
1. ALL TRANSISTORS
2. ALL DIODES IN4148
3. ALL RESISTORS ARE
4. ALL CAPACITORS AR
5. TEST VARIABLE.
6. FOR TOLERANCES
7. VALUES CHANGE
PL-17396-1, PL-173
8. FOR -1 CONFIG

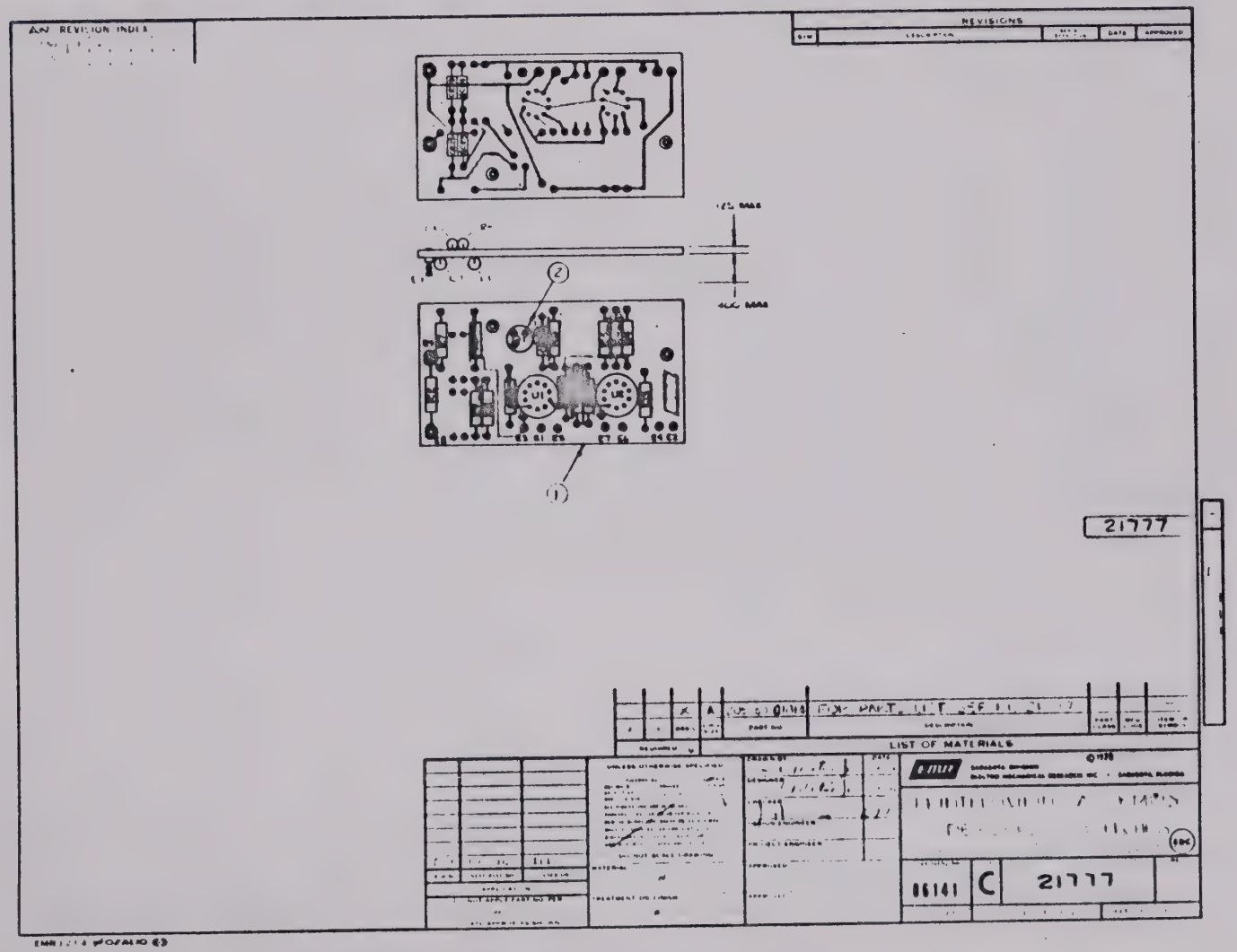

Figure 5-14A. Detector Switches Assembly, Assembly Diagram

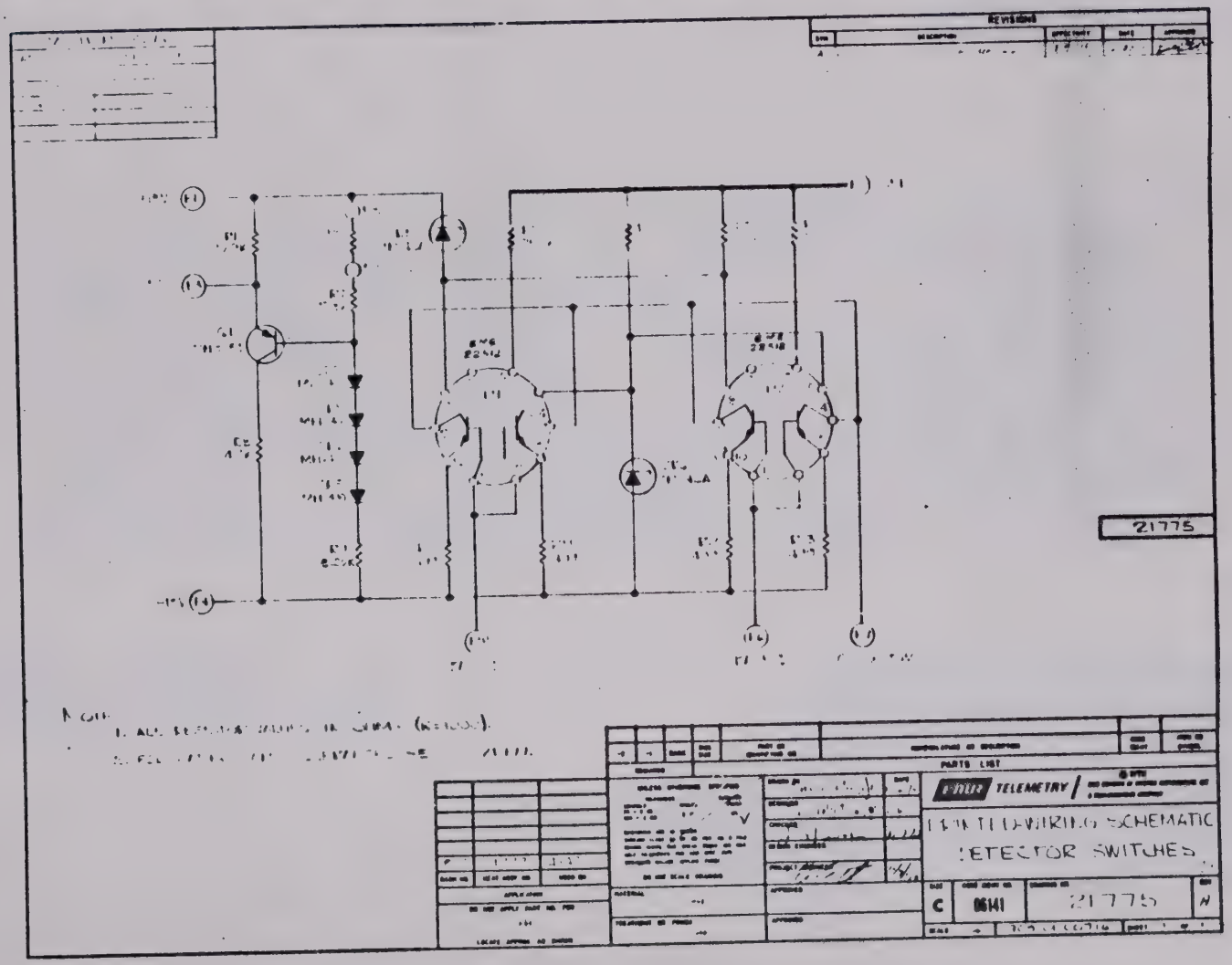

Figure 5-14B. Detector Switches Assembly, Schematic Diagram

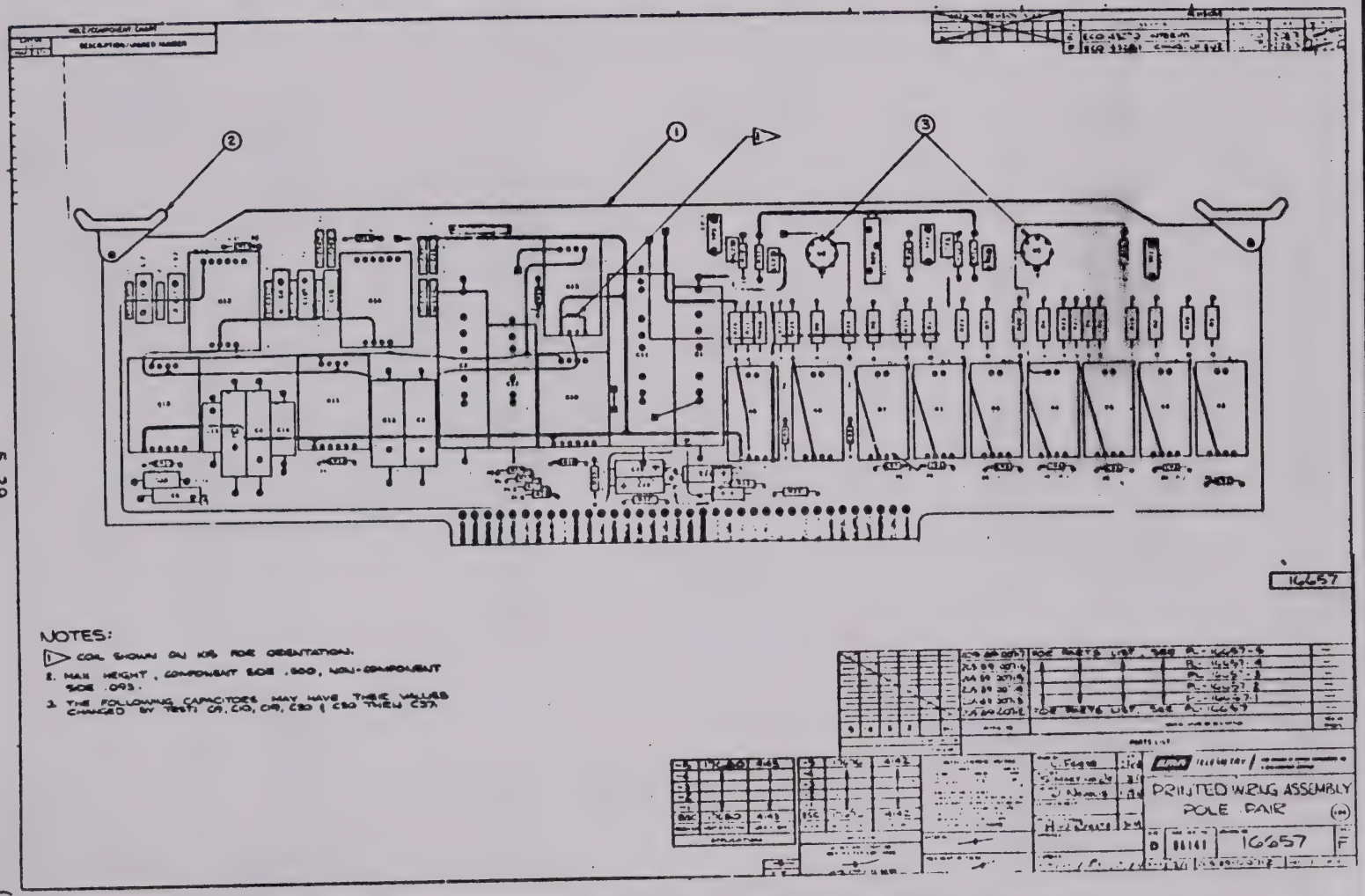

Figure 5-15. Pole Pair Cards A2A10, A2A11, and A2A12 Assembly Diagram

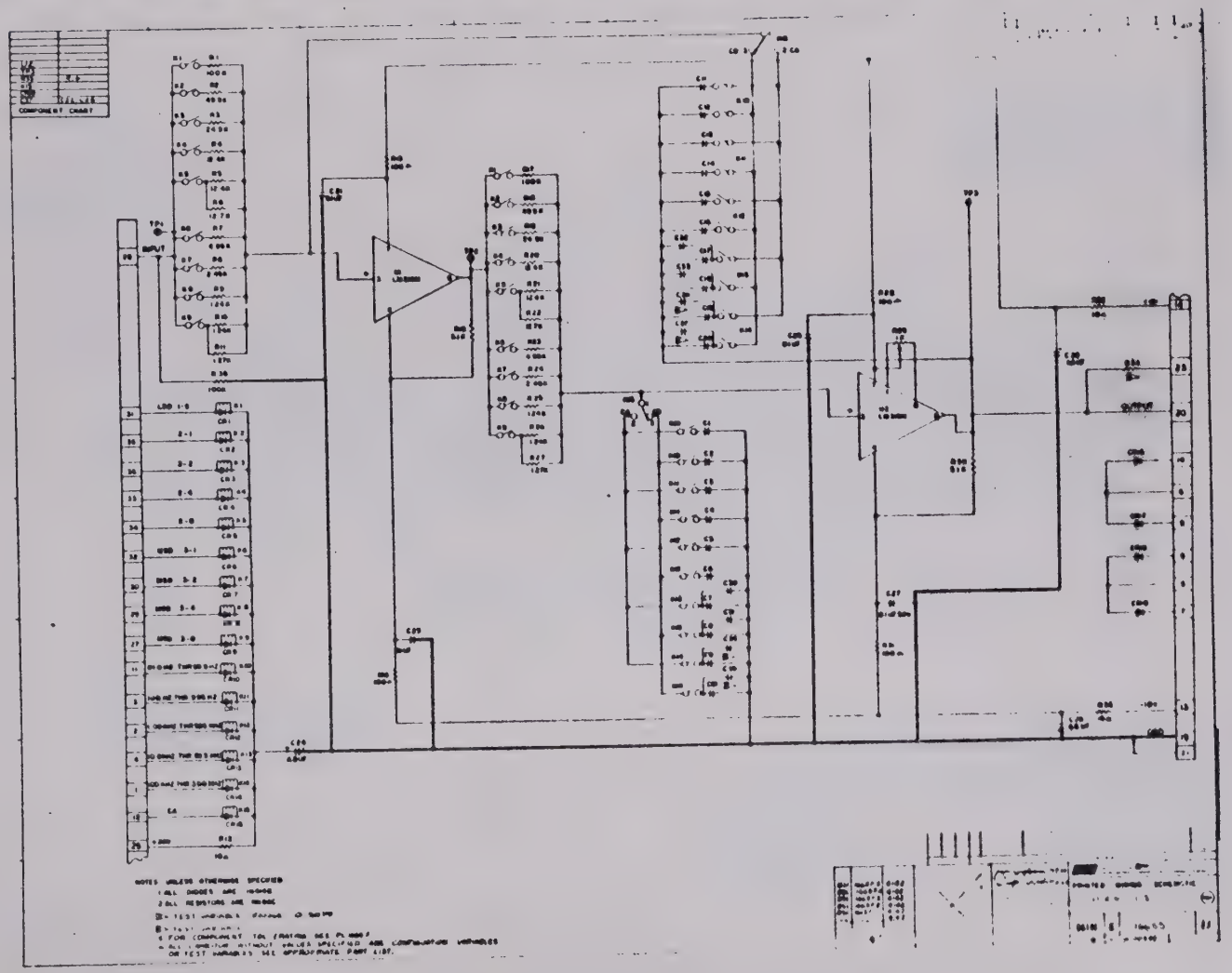

Figure 5-16. Pole Pair Cards A2A10, A2A11, and A2A12 Schematic Diagram

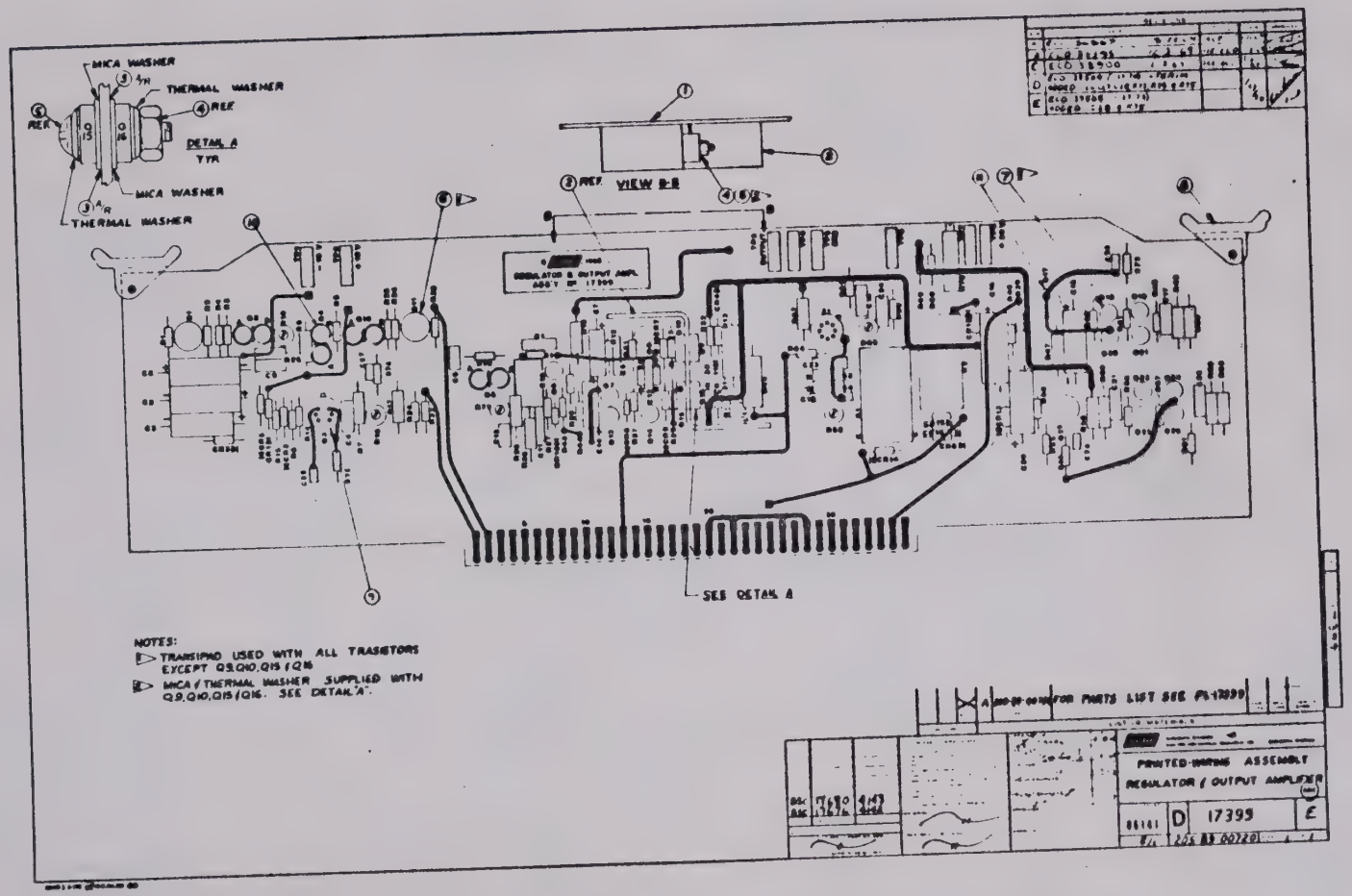

Figure 5-17. Regulator and Output Amplifier Card A2A15 Assembly Diagram

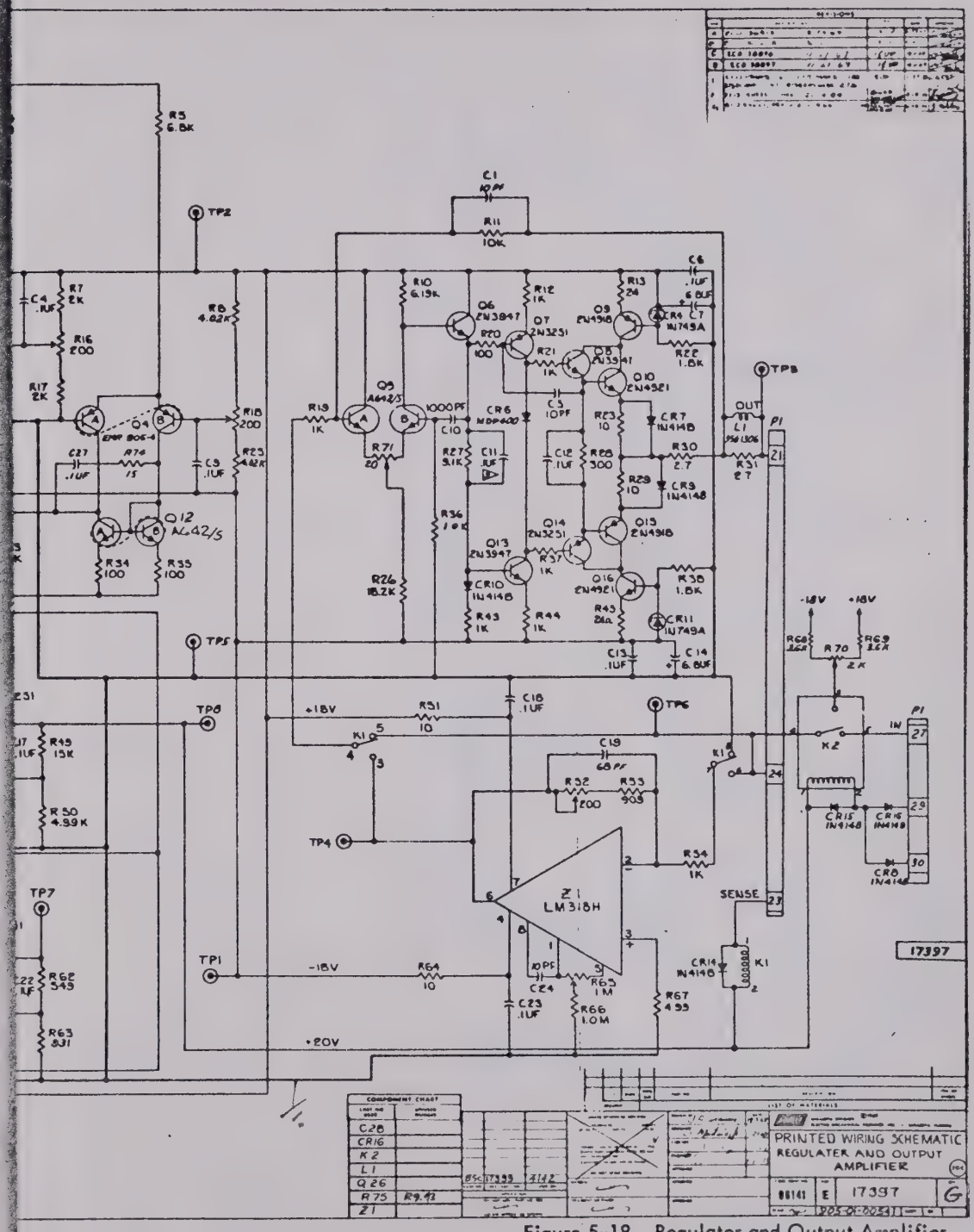

Figure 5-18. Regulator and Output Amplifier Card A2A15 Schematic Diagram

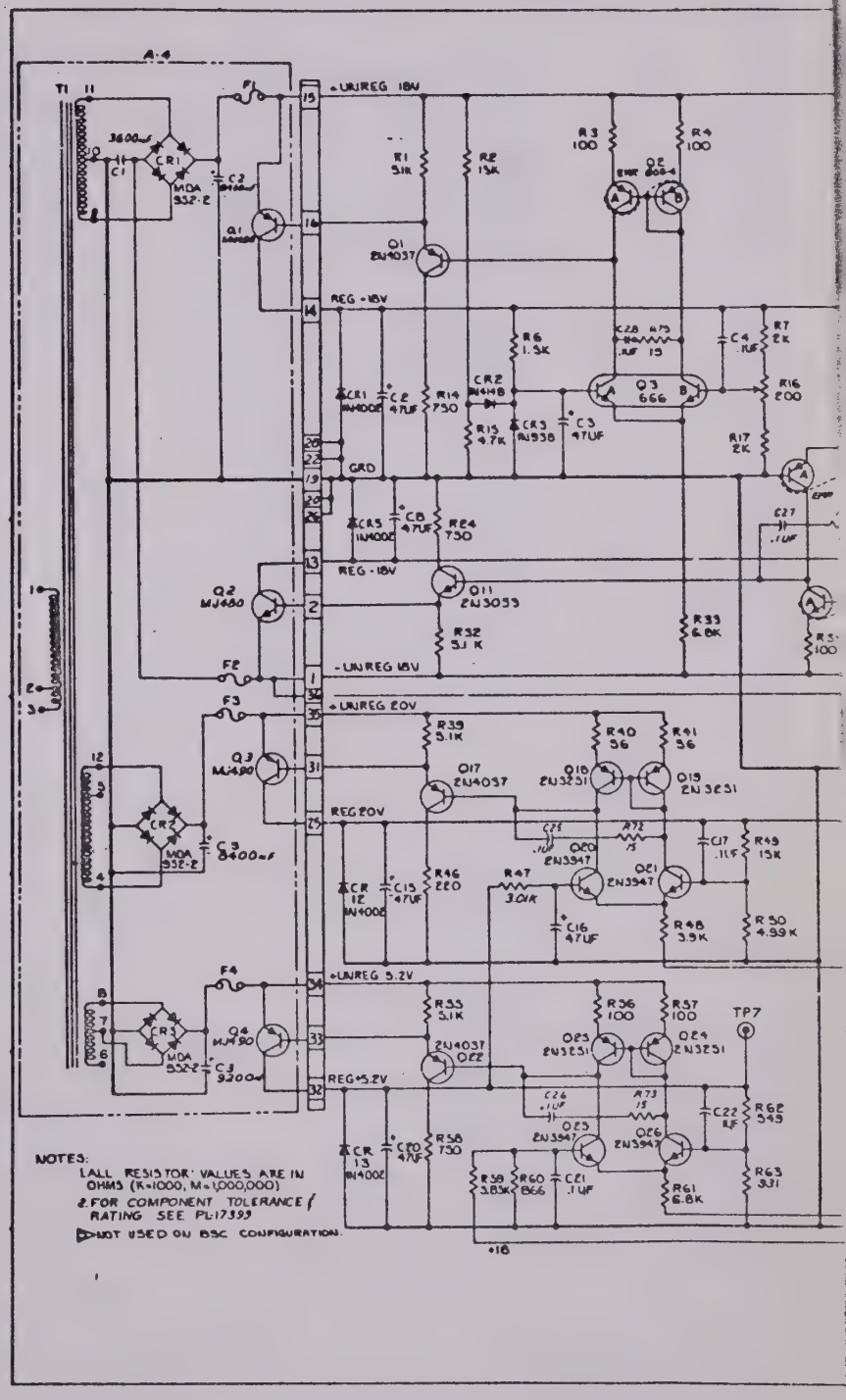
A-4
T1
F1
+UNREG 18V
R1 5.1K
R2 15K
R3 100
R4 100
Q2 2N4037
REG -18V
R6 1.5K
C4 .1UF
R7 2K
CR1 IN4002
C2 47UF
R14 750
CR2 IN4148
R16 200
R15 4.7K
CR3 IN938
C3 47UF
R17 2K
GRD
CR5 IN4002
C8 47UF
R24 750
C27 .1UF
Q2 MJ480
Q11 2N3053
REG -18V
R32 3.1 K
R33 6.8K
-UNREG 18V
F2
F3
+UNREG 20V
R39 5.1K
R40 56
R41 56
Q3 MJ480
Q17 2N4037
Q18 2N3251
Q19 2N3251
REG 20V
C25 .1UF
R72 15
C17 .1UF
R49 15K
Q20 2N3947
Q21 2N3947
CR 12 IN4002
C15 47UF
R46 220
R47 3.01K
C16 47UF
R48 3.9K
R50 4.99K
F4
+UNREG 5.2V
R35 5.1K
R36 100
R37 100
TP7
Q4 MJ490
2N4037 Q22
Q23 2N3251
Q24 2N3251
REG +5.2V
C26 .1UF
R73 15
C22 1UF
R62 549
Q25 2N3947
Q26 2N3947
CR 13 IN4002
C20 47UF
R58 730
R59 3.83K
R60 866
C21 .1UF
R61 6.8K
R63 331
+18
NOTES:
1.ALL RESISTOR VALUES ARE IN OHMS (K=1000, M=1,000,000)
2.FOR COMPONENT TOLERANCE / RATING SEE PL-17393
▷NOT USED ON BSC CONFIGURATION.

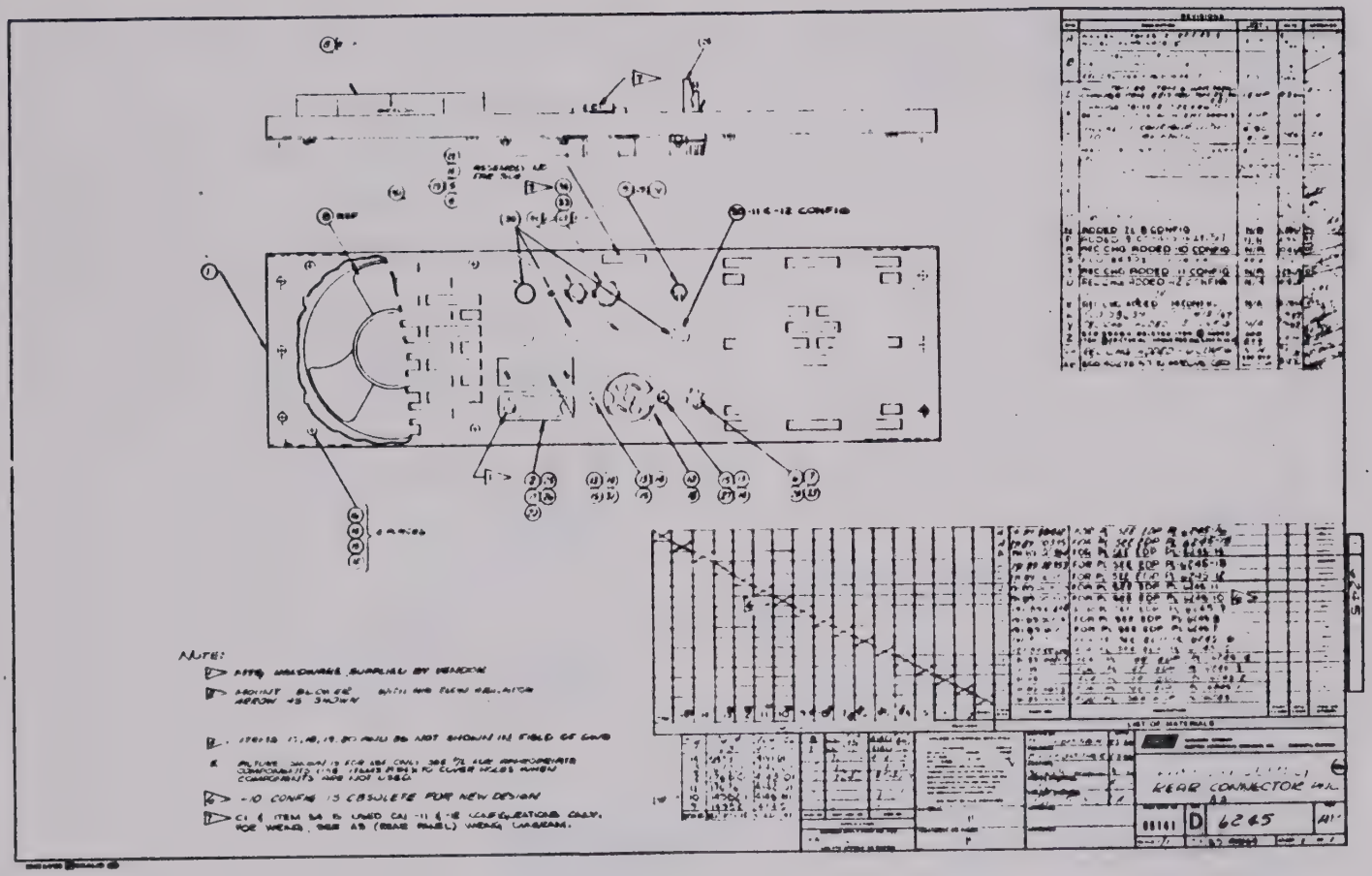

Figure 5-19. Rear Connector Panel A3 Assembly Diagram

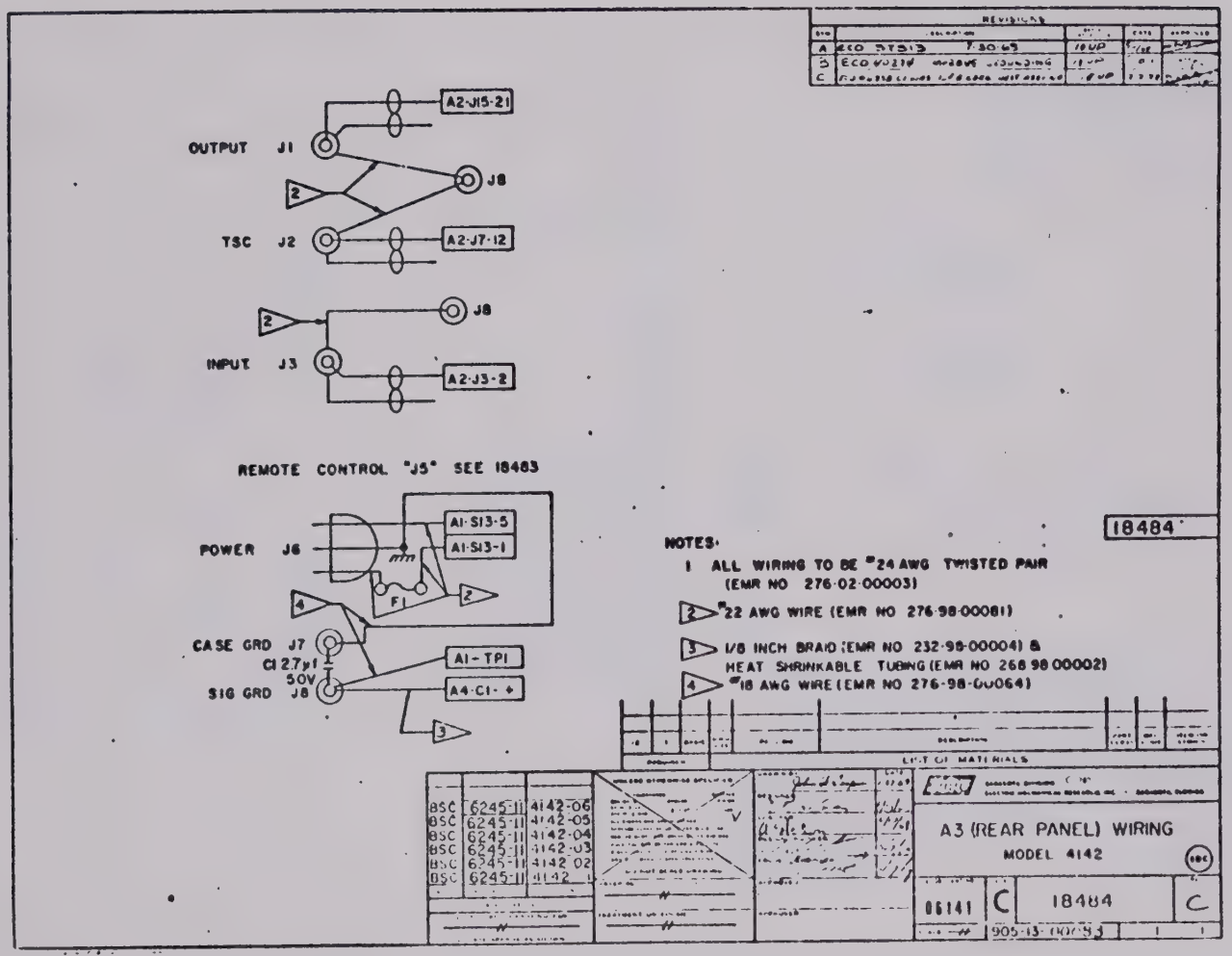

Figure 5-20. Rear Connector Panel A3 Wiring Diagram

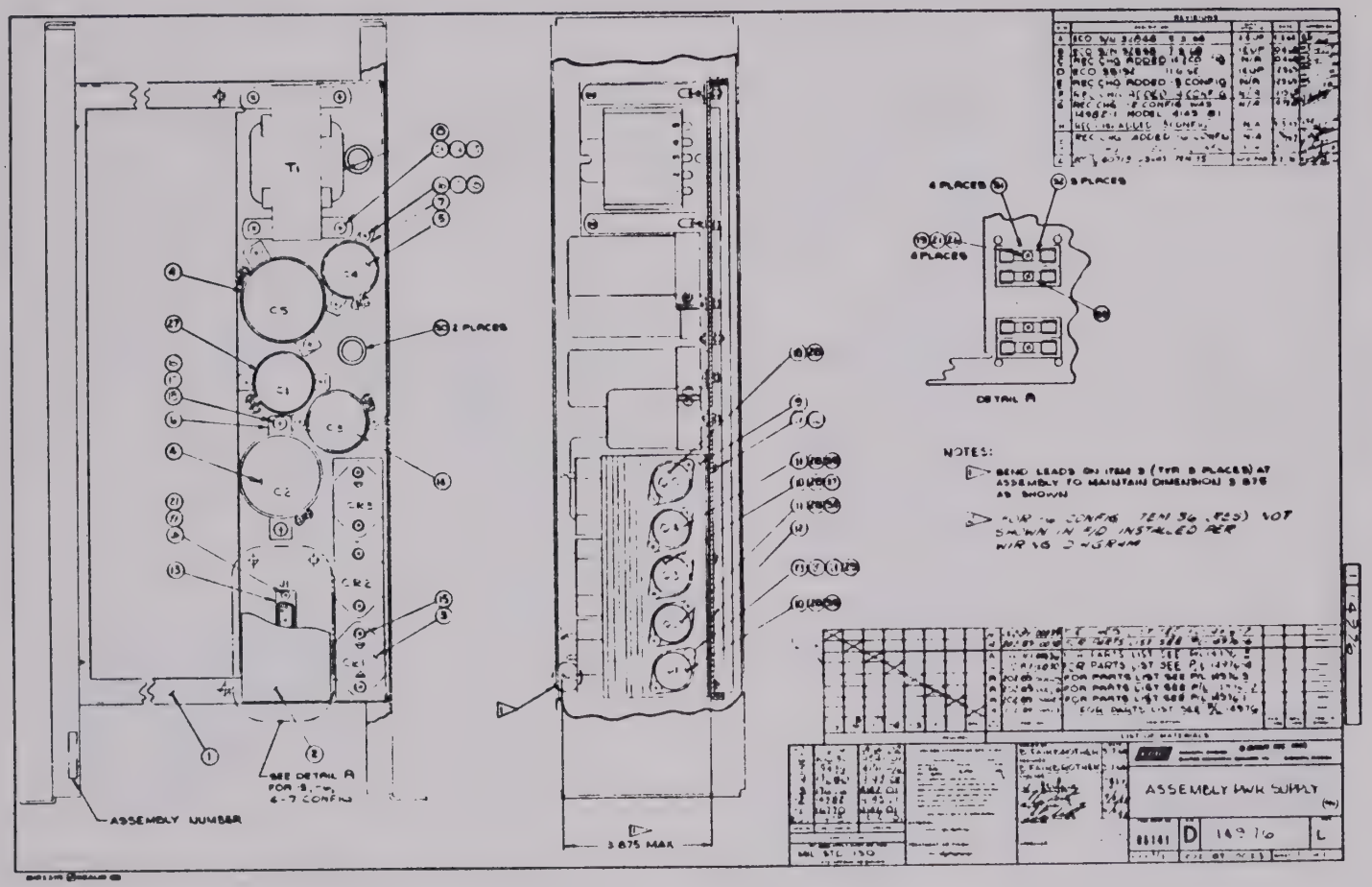

Figure 5-21. Power Supply Assembly A4 Assembly Diagram

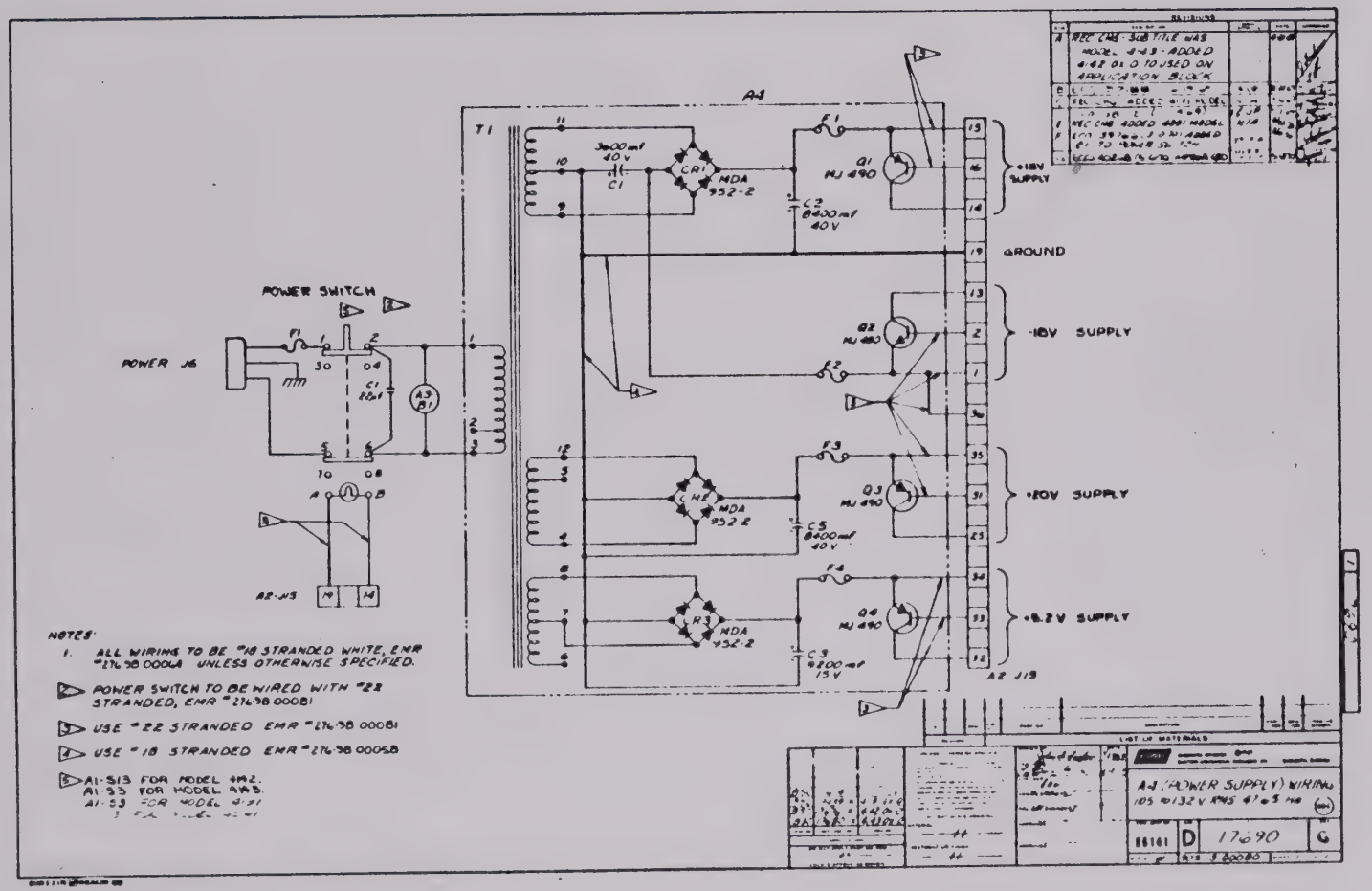

Figure 5-22. Power Supply Assembly A4 Schematic Diagram
(Models 4142-0X-0)

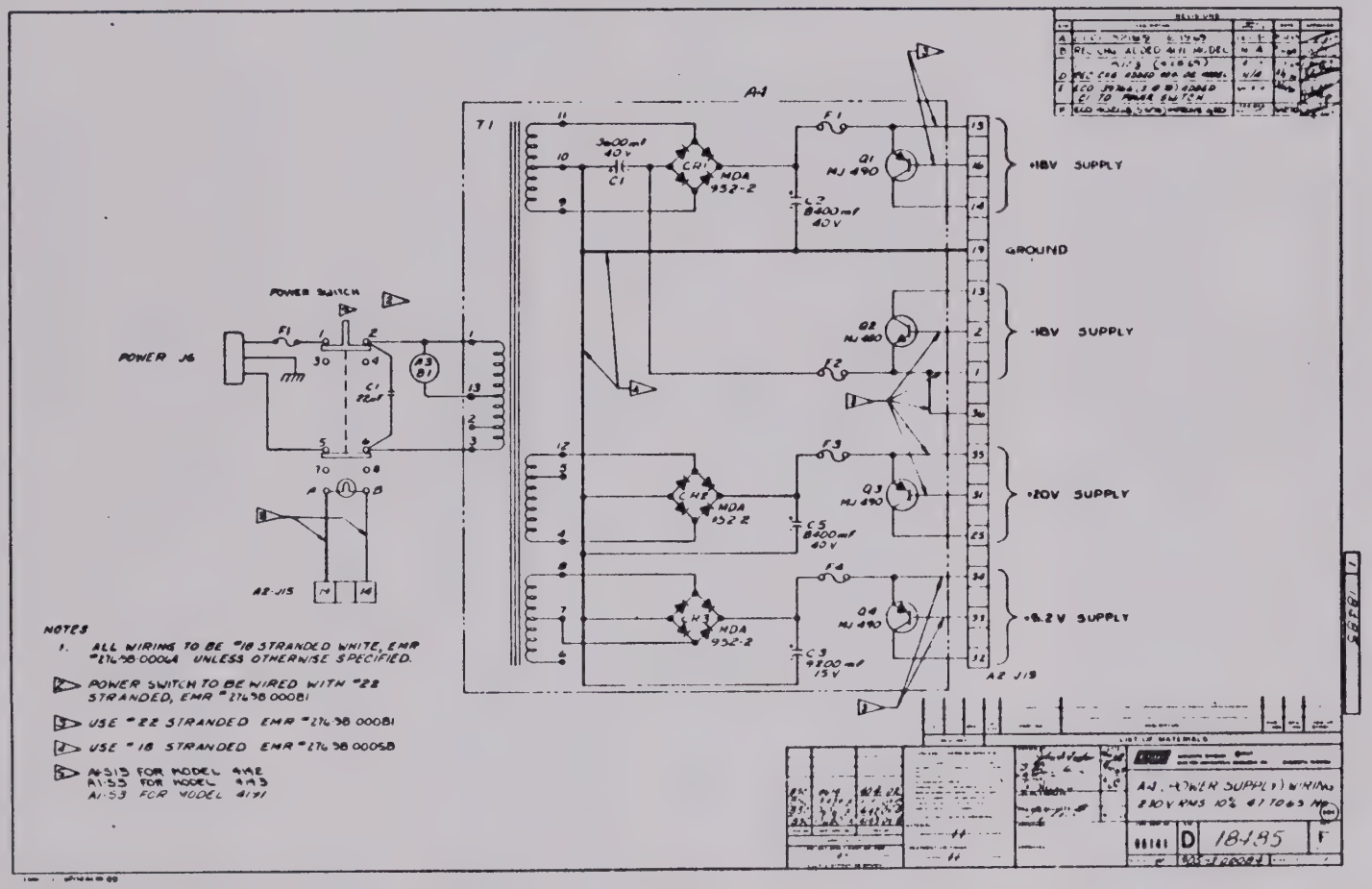

Figure 5-23. Power Supply Assembly A4 Schematic Diagram
(Models 4142-0X-8)

SECTION 6

PARTS LISTS AND RECOMMENDED SPARES

6.1 GENERAL

This section contains information concerning parts replacement, spares provisioning, and parts ordering information for the EMR Model 4142 PBW Tunable Discriminator. Paragraph 6.2 describes the parts breakdown for the Model 4142 as provided in this manual. Recommended spares, spares provisioning information, and parts ordering instructions are contained in paragraphs 6.3, 6.4, and 6.5, respectively.

6.2 PARTS LIST DESCRIPTION

Table 6-1 contains the top level parts breakdown for the Model 4142. This table identifies the various configurations of the 4142 and lists the major assemblies and subassemblies contained in each configuration in reference designator sequence. Each assembly or subassembly is common to all configurations of the 4142 unless otherwise noted in the DESCRIPTION column. The FIG. NO. column on Table 6-1 identifies the specific drawing in Section 5 of this manual which illustrates part locations for a particular assembly. The PAGE NO. column identifies the page on which the detailed parts list for particular assembly begins. For example, the assembly diagram for assembly A2A3, Input Card Printed-Wiring Assembly, is provided on Figure 5-5 and the detailed parts breakdown for this assembly starts on page 6-9.

The parts list for each assembly contains a listing of all subassemblies and components of the assembly. These subassemblies and/or components are identified by an item number in the ITEM NO. column. The item numbers (or component designation) correspond to numbers in the reference balloons on the associated EMR drawing. Also included in the parts list for each item is the quantity required (QTY REQ'D), EMR PART NUMBER, EMR DRAWING OR SPEC. NO., item DESCRIPTION, VENDOR NAME, and VENDOR PART NUMBER.

The listings in the VENDOR NAME column are abbreviations for the particular vendors. These abbreviations and complete vendor identification are contained in Table 6-3.

6.3 RECOMMENDED SPARES

A list of the recommended spare parts for the 4142 is contained in Table 6-2. The recommended spares as listed in this table are based on the following conditions:

a. Operating time -- 8 hours/day, 5 days/week (2080 hours/year).

b. Operating temperature -- 10°C to 50°C.

c. User has capability to repair to the component level.

d. Failure rates are constant.

e. A 0.9 probability of being able to repair from the recommended complement for one year.

f. Equipment will be used as ground equipment (as opposed to vehicular or airborne).

The recommended spares table contains a PART DESCRIPTION column, an EMR STOCK NO. column, a VENDOR NAME column, a VENDOR PART NO. column, a TQ column which is the total quantity of the part in the unit, and an RS column which lists the number of recommended spares for the part. The listings in the VENDOR NAME column are abbreviations for the particular vendors. These abbreviations and complete vendor identification are described in Table 6-3.

6.4 PROVISIONING CONSIDERATIONS

The selection of an optimum spare parts complement involves a number of considerations known only to the user. These considerations include operating time and cycles, operating environment, number of equipments to be spared and their locations with respect to one another, urgency of returning an equipment to service, troubleshooting, repair and test capability, stock of commonly used parts, etc.

Sparing considerations known to EMR include mean-time-between-failures for parts and assemblies under various operating environments, prices, relative ease of troubleshooting, repair, retest, etc.

Table 6-4 lists the type of information required in order for EMR to recommend an optimum spare parts complement for specific operating and logistic situations.

If the information outlined in Table 6-4 is supplied to EMR, a recommended list will be furnished at no cost for each individual situation.

6.5 ORDERING INSTRUCTIONS

When ordering parts, complete description of each part as listed in DESCRIPTION column of parts list must accompany order. Also included, must be EMR stock number and vendor's name and part number.

Table 6-1. Model 4142 Parts List

REF. DESIG.	DESCRIPTION	EMR STOCK NO.	VENDOR NAME	VENDOR PART NO.	TQ	FIG. NO.
	MODEL 4142-01 PBW TUNABLE DISCRIMINATOR ASSEMBLY	089-89-00056	EMR-T	17676	1	5-1
	MODEL 4142-02 PBW TUNABLE DISCRIMINATOR ASSEMBLY	089-89-00057	EMR-T	17676-1	1	5-1
	MODEL 4142-03 PBW TUNABLE DISCRIMINATOR ASSEMBLY	089-89-00058	EMR-T	17676-2	1	5-1
	MODEL 4142-04 PBW TUNABLE DISCRIMINATOR ASSEMBLY	089-89-00059	EMR-T	17676-3	1	5-1
	MODEL 4142-05 PBW TUNABLE DISCRIMINATOR ASSEMBLY	089-89-00060	EMR-T	17676-4	1	5-1
	MODEL 4142-06 PBW TUNABLE DISCRIMINATOR ASSEMBLY	089-89-00061	EMR-T	17676-5	1	5-1
A1	SUBPANEL ASSEMBLY	191-89-00325	EMR-T	17688	1	5-2
A1C1	CAPACITOR, 2.7 Mf ±20%, 50V	301-23-27003	Erie	8141-050-651-275M	1	5-22/5-23
A2	CARD CHASSIS ASSEMBLY	042-89-00125	EMR-T	14980-3	1	--
A2CR1, CR2, & CR3	DIODE	088-10-41480	JEDEC	1N4148	3	5-4
A2A3	INPUT CARD PRINTED-WIRING ASSEMBLY	205-89-00711	EMR-T	17405	1	5-5
A2A5	BPIF SECTION 1 PRINTED-WIRING ASSEMBLY	205-89-00721	EMR-T	17390	1	5-7
A2A6	BPIF SECTION 2 PRINTED-WIRING ASSEMBLY	205-89-00722	EMR-T	17393	1	5-9
A2A7	TAPE-SPEED COMPENSATION CARD PRINTED-WIRING ASSEMBLY (Models 4142-02, -04, and -06 only)	205-89-00723	EMR-T	17402	1	5-11
A2A8	LIMITER, DETECTOR, AND SINGLE POLE PRINTED-WIRING ASSEMBLY (Models 4142-01 and -02 only)	205-89-00710	EMR-T	17396	1	5-13
A2A8	LIMITER, DETECTOR, AND SINGLE POLE PRINTED-WIRING ASSEMBLY (Models 4142-03 and -04 only)	205-89-00718	EMR-T	17396-1	1	5-13

Table 6-1 (Cont'd.). Model 4142 Parts List

REF. DESIG.	DESCRIPTION	EMR STOCK NO.	VENDOR NAME	VENDOR PART NO.	TQ	FIG. NO.
A2A8	LIMITER, DETECTOR, AND SINGLE POLE PRINTED-WIRING ASSEMBLY (Models 4142-05 and -06 only)	205-89-00719	EMR-T	17396-2	1	5-13
	DETECTOR SWITCHES PRINTED-WIRING ASSEMBLY (All Models)	205-89-01014	EMR-T	21777	1	5-14A
A2A10	POLE PAIR PRINTED-WIRING ASSEMBLY (Models 4142-05 and -06 only)	205-89-00715	EMR-T	16657-3	1	5-15
A2A11	POLE PAIR PRINTED-WIRING ASSEMBLY (Models 4142-03 and -04 only)	205-89-00713	EMR-T	16657-1	1	5-15
A2A11	POLE PAIR PRINTED-WIRING ASSEMBLY (Models 4142-05 and -06 only)	205-89-00716	EMR-T	16657-4	1	5-15
A2A12	POLE PAIR PRINTED-WIRING ASSEMBLY (Models 4142-01 and -02 only)	205-89-00712	EMR-T	16657	1	5-15
A2A12	POLE PAIR PRINTED-WIRING ASSEMBLY (Models 4142-03 and -04 only)	205-89-00714	EMR-T	16657-2	1	5-15
A2A12	POLE PAIR PRINTED-WIRING ASSEMBLY (Models 4142-05 and -06 only)	205-89-00717	EMR-T	16657-5	1	5-15
A2A15	REGULATOR AND OUTPUT AMPLIFIER PRINTED-WIRING ASSEMBLY	205-89-00720	EMR-T	17399	1	5-17
A2J3, J5, J6, & J7	CONNECTOR, PWB, 36 Contacts	063-98-00114	Continental	K600-13PCS-CGD36	8	-
A2J8	CONNECTOR, Receptacle, PCB, 72 Contacts	063-97-00001	Amph.	225-23621-101	1	-
A2J10, J11, J12, & J15	Same as A2J3					

Table 6-1 (Cont'd.). Model 4142 Parts List

REF. DESIG.	DESCRIPTION	EMR STOCK NO.	VENDOR NAME	VENDOR PART NO.	TQ	FIG. NO.
A2L1 & A2L2	COIL ASSEMBLY	055-89-00001	EMR-T	956-1306	2	5-4
A2R1	RESISTOR, 1K ±5%, 1/4W	616-02-10000	Allen-Bradley	RC07GF102J	1	5-4
A3	REAR CONNECTOR PANEL ASSEMBLY	191-89-00329	EMR-T	6245-11	1	5-19
A4	POWER SUPPLY ASSEMBLY	202-89-00029	EMR-T	14976-3	1	5-21
	EXTENDER CARD	905-11-00015	EMR-T	14198	1	-

EMR - TELEMETRY

PARTS LIST 17608 REV DATE 01/19/77 REV LTR M

LIST TITLE PANEL,ASSY,SUB CHGE CONT NO. CODE IDENT SHT 1 OF 2
PART NO. 191-89-C0125 ECO RECURD 2 06141 CKD BY

ITEM NO.	QTY REQD	EMR NUMBER	DRAWING OR SPEC NO.	DESCRIPTION	VENDOR NAME	VENDOR PART NUMBER
1	1	191-99-00250	14137	PANEL,ASSY,SUB	EMR	191-89-00250
2	2	128-99-C0002	7326	HANDLE, S.080,CLR ANODIZE	EMR	128-89-00002
3	1	239-99-00009	6543	SPACER,TEST POINT	EMR	239-99-00009
4	1	016-99-00042	11977	BRKT, SWITCH MOUNTING	EMR	016-99-00042
5	1	239-98-C0026		SPACER,SWITCH ECCU MOD	EE CO	S-365G
6	4	284-98-C0001		RET, SWITCH END PIECE	EECO	E-365G
7	4	229-02-00229		SCREW,10-32X1/2 FLAT HD.	QVL	MS24693-C272
8	4	273-02-00023		WASHER,1/4,EXT TOOTH	PRCMT OPTION	MS35335-61
9	AR	060-11-C0002		CMPD,LOCKING,FINE THREAD	LOCTITE CORP	LOCTITE GRADE H
10	4	229-02-00077		SCREW,4-40X1/2 PAN HD	PRCMT OPTION	MS51957-17
11	2	229-02-00092		SCREW,6-32X1-1/4 PAN HD	PRCMT OPTION	MS51957-35
12	2	287-C2-C0003		NUT,HEX, 6-32	PRCMT OPTION	MS35649-264
13	2	273-C2-C0006		WASHER,#6, FLT ST STL	PRCMT OPTION	MS15795-805
14	2	273-02-00026		WASHER,#6,INT TOOTH	PRCMT OPTION	MS35333-71
15	AR	229-02-C0068		SCREW,2-56X7/16 PAN HD	PRCMT OPTION	MS51957-6
16	2	287-99-C0007	20989	NUT,PAN,THUMBWHEEL SW MT	EMR	287-99-00007
17	2	287-99-00013	20988-5	NUT BAR,THUMBWHEEL SW MT	EMR	287-99-00013
18	AR	273-07-00024		WASHER,#2,INT TOOTH	PRCMT OPTION	MS35333-69
19	1	151-02-C0001		LAMP,INCAND, 28V 40MA	PRCMT OPTION	MS25237-327
21	2	049-98-C0004		CLIP,MTG,FOR CRYO LIGHT	ENDL DEVICES	2212MC
22	2	194-98-C0007		PIN,STOP	EECU	191611
23	1	233-99-C0086	17679	SPACER,METER	EMR	239-99-C0086
24	AR	268-C2-C0029		TUBING,#20,EXTR TEF,CLR	PRCMT OPTION	MIL-I-22129
25	1	259-98-C0002		TIE,CABLE 1/16TO 1 3/4IN	PMLIB	SST25
26	4	049-99-C0002	11801	CLIP,METER MTG	EMR	049-99-C0002
C 1	1	599-01-C0005	17685	CAP, 4MDA VARO		
CR 1	1	088-97-02760		DIO,GE,SW,100V,ERR 300NS	MML 39	1N276
CR 2	1	088-97-02760		DIO,GE,SW,100V,ERR 300NS	MML 39	1N276
DS 1 THRU	4	155-89-C0001	7327	LIGHT,ASSY, DECIMAL	EMR	155-89-C0001
DS 4						
DS 5	1	155-98-00011		LIGHT,28V, 40MA	ELDEMA	CFW-22556-06
DS 7	1	155-98-C0011		LIGHT,28V, 40MA	ELDEMA	CFW-22556-06
DS 9	1	155-89-00001	7327	LIGHT,ASSY, DECIMAL	EMR	155-89-00001
DS 10	1	155-89-C0001	7327	LIGHT,ASSY, DECIMAL	EMR	155-89-00001
M 1	1	170-99-00024	16016-4	METER,EDGEWISE,0 UA/0,200	EMR	170-99-00024
M 2	1	170-99-00022	16016-2	METER,EDGEWISE,-100 L,610	EMR	170-99-00022
R 1	1	201-98-C0077		POT, 1K 5% 10T,.030 RES	CLAROSTAT	CM35479
R 2	1	201-98-C0077		POT, 1K 5% 10T,.030 RES	CLAROSTAT	CM35479
R 3	1	616-02-20000		RES,2K 5% 1/4W	ALLEN BRAD	RC07GF202J
R 4	1	616-02-20000		RES,2K 5% 1/4W	ALLEN BRAD	RC07GF202J
S 1	1	250-99-C0044	19611-1	SW,ROTARY,6P,2POS,7SECT	EMR	250-89-00044
S 2	1	250-85-C0073	19611-29	SW,ROT,2 P,3 POS 1 SECT	EMR	250-89-C0073
S 3	1	250-89-C0007	11604	SWITCH,ASSY, THUMBWHEEL	EMR	250-89-00007
S 4 THRU	4	250-98-C0015		SW,THUMBWHL,RCDECPPLM	EECU	ADG-G
S 7						

FIRST USAGE MODEL 4147

ITEM NO.	QTY REQD	E M R NUMBER	DRAWING OR SPEC NO.	DESCRIPTION	VENDOR NAME	VENDOR PART NUMBER
S 8	1	250-99-00019	14369	SWITCH,ROTARY,MODIFIED	EMR	250-99-00019
S 9	1	250-89-00007	11604	SWITCH,ASSY, THUMBWHEEL	EMR	250-89-00007
S 10	1	250-98-00027		SW,THUMBWHL,DEC,10 PUSH	EECO	801-G
S 11	1	250-98-00032		SWITCH,THUMBWHL BCD 10POS	EECO	802-G
S 12	1	250-98-00032		SWITCH,THUMBWHL BCD 10POS	EECO	802-G
S 13	1	250-98-00239		SW,PB,LITED,10A@125VAC	CLARE PENDAR	S61122/C1360AWW
S 14	1	250-99-00019	14369	SWITCH,ROTARY,MODIFIED	EMR	250-99-00019
TP 1 THRU TP 4	4	143-98-00008		JACK,TEST PT,PNL TYPE,WHT	E.F.JOHNSON	105-0251-001
REF 1	1	905-05-00189	17685	VARIABLE CHART	EMR	905-05-00189
REF 2	1	905-13-00082	18483	WIRING,DIAGRAM,PANEL,SUB	EMR	905-13-00082

FIRST USAGE MODEL 4142

A3

E M R - T E L E M E T R Y

PARTS LIST 17405 REV DATE 05/14/75 REV LTR R

LIST TITLE PWA,INPUT CARD CHGE CONT NO. CODE IDENT SHT 1 OF 5
PART NO. 205-89-C0711 ECO RECORD 1 06141 CKD BY

ITEM NO.	QTY REQD	E M R NUMBER	DRAWING OR SPEC NO.	DESCRIPTION	VENDOR NAME	VENDOR PART NUMBER
1	1	204-89-00382	17404	PWB,INPUT CARD	EMR	204-89-00382
2	2	299-99-00003	6477-2	EJCTR,CARD,.062BD,PCSN3	EMR	299-99-00003
3	21	189-98-00004		PAD,XSTR 4 PIN*USE UPTL*	DEL BLINN	100-000-NY
4	8	189-99-00001	800-1	PAD,XSTR 10-5,9 OR 11,4 P	EMR	189-99-00001
5	1	301-30-02209		CAP,CR , 100V 22PF 10%	MML 48	8111-100-COG-220K/MML
C 1	13	337-14-68003	601	CAP. 6.8MF 10% 35V	EMR	337-14-68003
THRU						
C 13						
C 14	1	337-12-22004	601	CAP., 22MF 10% 15V	EMR	337-12-22004
C 15	1	337-12-22004	601	CAP., 22MF 10% 15V	EMR	337-12-22004
C 16	1	339-13-10005	601	CAP, 100MF 10% 20V D CASE	EMR	339-13-10005
C 17	1	337-14-68003	601	CAP. 6.8MF 10% 35V	EMR	337-14-68003
C 18	1	337-14-68003	601	CAP. 6.8MF 10% 35V	EMR	337-14-68003
C 19	1	304-08-03309	600	CAP. 33PF .5PF 500V	EMR	304-08-03309
C 20	1	304-01-01509	600	CAP. 15PF .5PF 500V	EMR	304-01-01509
C 21	1	337-12-22004	601	CAP., 22MF 10% 15V	EMR	337-12-22004
C 22	1	337-12-22004	601	CAP., 22MF 10% 15V	EMR	337-12-22004
C 23	5	337-14-68003	601	CAP. 6.8MF 10% 35V	EMR	337-14-68003
THRU						
C 27						
C 29	1	339-13-10005	601	CAP, 100MF 10% 20V D CASE	EMR	339-13-10005
C 30	1	339-13-10005	601	CAP, 100MF 10% 20V D CASE	EMR	339-13-10005
C 31	6	337-14-68003	601	CAP. 6.8MF 10% 35V	EMR	337-14-68003
THRU						
C 36						
C 37	1	304-20-15009	600	CAP. 150PF 1% 500V	EMR	304-20-15009
C 38	1	361-01-20001	809	CAP. .02MF 10% 100V	EMR	361-01-20001
C 39	1	304-20-15009	600	CAP. 150PF 1% 500V	EMR	304-20-15009
C 40	1	361-01-20001	809	CAP. .02MF 10% 100V	EMR	361-01-20001
C 41	1	337-14-68003	601	CAP. 6.8MF 10% 35V	EMR	337-14-68003
C 42	1	337-14-68003	601	CAP. 6.8MF 10% 35V	EMR	337-14-68003
CR 1	9	088-10-41480		DIODE,SW,75V/5UA,4NS/10MA	JEDEC	1N4148
THRU						
CR 9						
CR 10	1	088-99-00329	642-07	DIODE,ZENER 0.4W 6.2V	EMR	088-99-00329
CR 12	1	088-10-41480		DIODE,SW,75V/5UA,4NS/10MA	JEDEC	1N4148
CR 13	1	088-99-00199	642-06	DIODE,ZENER 0.4W 5.6V	EMR	088-99-00199
CR 14	1	088-10-41480		DIODE,SW,75V/5UA,4NS/10MA	JEDEC	1N4148
CR 15	1	088-99-00199	642-06	DIODE,ZENER 0.4W 5.6V	EMR	088-99-00199
CR 16	1	088-99-00259	642-12	DIODE,ZENER 0.4W 10.0V	EMR	088-99-00259
CR 17	1	088-10-41480		DIODE,SW,75V/5UA,4NS/10MA	JEDEC	1N4148
CR 18	1	088-99-00199	642-06	DIODE,ZENER 0.4W 5.6V	EMR	088-99-00199
CR 19	1	088-10-41480		DIODE,SW,75V/5UA,4NS/10MA	JEDEC	1N4148
CR 20	1	088-99-00199	642-06	DIODE,ZENER 0.4W 5.6V	EMR	088-99-00199
CR 21	1	088-10-40040		DIODE,RECTIFIER 400V,1A I	JEDEC	1N4004

FIRST USAGE MODEL 4142

(Rev. F)

ITEM NO.	QTY REQD	E M R NUMBER	DRAWING OR SPEC NO.	DESCRIPTION	VENDOR NAME	VENDOR PART NUMBER
CR 22	1	088-10-40010		DIODE,RECTIFIER 400V,1A I	JEDEC	1N4004
CR 24 THRU	13	088-10-41480		DIODE,SW,75V/5UA,4NS/10MA	JEDEC	1N4148
CR 36						
K 2 THRU	8	219-99-00028	28531-21	RELAY,2 FORM A,GOLD CONT	EMR	219-99-00028
K 9						
K 10	1	219-98-00045		RELAY,2A RMDD CONT,26V	HATHAWAY	65630-37/GP-2A-26P
Q 1	1	263-10-35650		XSTR,NPN 40MHZ,30V AMPL	JEDEC	2N3565
Q 2	1	263-10-09290		XSTR,NPN AMPL,LOW NOISE	JEDEC	2N929
Q 3	1	263-10-17110		XSTR,NPN AMPL,SWITCH,HFE	JEDEC	2N1711
Q 4	1	263-10-17110		XSTR,NPN AMPL,SWITCH,HFE	JEDEC	2N1711
Q 5 THRU	6	263-10-35650		XSTR,NPN 40MHZ,30V AMPL	JEDEC	2N3565
Q 10						
Q 11	1	263-10-39470		XSTR,NPN 40V SW-AMPL,HFE	JEDEC	2N3947
Q 12	1	263-10-39470		XSTR,NPN 40V SW-AMPL,HFE	JEDEC	2N3947
Q 13 THRU	4	263-10-35650		XSTR,NPN 40MHZ,30V AMPL	JEDEC	2N3565
Q 16						
Q 17	1	263-10-35660		XSTR,NPN 40MHZ,40V AMPL	JEDEC	2N3566
Q 18	1	263-10-35660		XSTR,NPN 40MHZ,40V AMPL	JEDEC	2N3566
Q 19	1	263-10-35650		XSTR,NPN 40MHZ,30V AMPL	JEDEC	2N3565
Q 20	1	263-10-35650		XSTR,NPN 40MHZ,30V AMPL	JEDEC	2N3565
Q 21	1	263-97-00093		XSTR,PNP,SWITCH/AMPL,50V	MRL 4	2N3251/2N3251A
Q 22 THRU	4	263-10-35650		XSTR,NPN 40MHZ,30V AMPL	JEDEC	2N3565
Q 25						
Q 26 THRU	4	263-10-35660		XSTR,NPN 40MHZ,40V AMPL	JEDEC	2N3566
Q 29						
R 1	1	616-02-10000		RES,1K 5% 1/4W	ALLEN BRAD	RC07GF102J
R 2	1	616-02-02209		RES,22 OHM 5% 1/4W	ALLEN BRAD	RC07GF220J
R 3	1	616-02-10009		RES,100 OHM 5% 1/4W	ALLEN BRAD	RC07GF101J
R 4	1	616-02-10009		RES,100 OHM 5% 1/4W	ALLEN BRAD	RC07GF101J
R 5	1	616-02-02209		RES,22 OHM 5% 1/4W	ALLEN BRAD	RC07GF220J
R 6	1	616-02-62001		RES,62K 5% 1/4W	ALLEN BRAD	RC07GF623J
R 7	1	616-02-10007		RES 100K 5% 1/4W	ALLEN BRAD	RC07GF104J
R 8	1	616-02-16001		RES,16K 5% 1/4W	ALLEN BRAD	RC07GF163J
R 9	1	616-02-16001		RES,16K 5% 1/4W	ALLEN BRAD	RC07GF163J
R 10	1	616-02-18001		RES,18K 5% 1/4W	ALLEN BRAD	RC07GF183J
R 11	1	616-02-47009		RES,470 OHM 5% 1/4W	ALLEN BRAD	RC07GF471J
R 12	1	616-02-11001		RES,11K 5% 1/4W	ALLEN BRAD	RC07GF113J
R 13	1	616-02-47009		RES,470 OHM 5% 1/4W	ALLEN BRAD	RC07GF471J
R 14	1	616-02-10001		RES,10K 5% 1/4W	ALLEN BRAD	RC07GF103J
R 15	1	616-02-91000		RES,9.1K 5% 1/4W	ALLEN BRAD	RC07GF912J
R 16	1	616-02-33009		RES,330 OHM 5% 1/4W	ALLEN BRAD	RC07GF331J
R 17	1	616-02-51009		RES,510 OHM 5% 1/4W	ALLEN BRAD	RC07GF511J
R 18	1	605-09-49900	825	RES. 4.99K 1% 1/8W	EMR	605-09-49900

FIRST USAGE MODEL 4142

ITEM NO.	QTY REQD	E M R NUMBER	DRAWING OR SPEC NO.	DESCRIPTION	VENDOR NAME	VENDOR PART NUMBER
R 19	1	605-09-15400	625	RES. 1.54 K 1% 1/8W	EMR	605-09-15400
R 20	1	605-09-22100	625	RES. 2.21K 1% 1/8W	EMR	605-09-22100
R 21	1	605-09-28700	625	RES. 2.87K 1% 1/8W	EMR	605-09-28700
R 22	1	605-09-37400	625	RES. 3.74K 1% 1/8W	EMR	605-09-37400
R 23	1	616-02-02209		RES,22 OHM 5% 1/4W	ALLEN BRAD	RC07GF220J
R 24	1	616-02-02209		RES,22 OHM 5% 1/4W	ALLEN BRAD	RC07GF220J
R 25	1	605-09-24900	625	RES. 2.49K 1% 1/8W	EMR	605-09-24900
R 26	1	605-09-26709	625	RES. 267 OHM 1% 1/8W	EMR	605-09-26709
R 27	1	605-09-63409	625	RES. 634 OHM 1% 1/8W	EMR	605-09-63409
R 28	1	605-09-86609	625	RES. 866 OHM 1% 1/8W	EMR	605-09-86609
R 29	1	605-09-17400	625	RES. 1.74K 1% 1/8W	EMR	605-09-17400
R 30	3	616-02-02209		RES,22 OHM 5% 1/4W	ALLEN BRAD	RC07GF220J
THRU						
R 32						
R 33	1	616-02-15000		RES,1.5K 5% 1/4W	ALLEN BRAD	RC07GF152J
R 34	1	616-02-10001		RES,10K 5% 1/4W	ALLEN BRAD	RC07GF103J
R 35	1	616-02-10009		RES,100 OHM 5% 1/4W	ALLEN BRAD	RC07GF101J
R 36	1	616-02-91000		RES,9.1K 5% 1/4W	ALLEN BRAD	RC07GF912J
R 37	1	616-02-10000		RES,1K 5% 1/4W	ALLEN BRAD	RC07GF102J
R 38	1	616-02-10009		RES,100 OHM 5% 1/4W	ALLEN BRAD	RC07GF101J
R 39	1	616-02-24000		RES,2.4K 5% 1/4W	ALLEN BRAD	RC07GF242J
R 40	1	616-02-47009		RES,470 OHM 5% 1/4W	ALLEN BRAD	RC07GF471J
R 41	1	616-02-51000		RES,5.1K 5% 1/4W	ALLEN BRAD	RC07GF512J
R 42	1	616-02-91000		RES,9.1K 5% 1/4W	ALLEN BRAD	RC07GF912J
R 43	1	616-02-15000		RES,1.5K 5% 1/4W	ALLEN BRAD	RC07GF152J
R 44	1	616-02-10000		RES,1K 5% 1/4W	ALLEN BRAD	RC07GF102J
R 45	1	616-02-51000		RES,5.1K 5% 1/4W	ALLEN BRAD	RC07GF512J
R 46	1	616-02-51000		RES,5.1K 5% 1/4W	ALLEN BRAD	RC07GF512J
R 47	1	616-02-18001		RES,18K 5% 1/4W	ALLEN BRAD	RC07GF183J
R 48	1	616-02-47009		RES,470 OHM 5% 1/4W	ALLEN BRAD	RC07GF471J
R 49	1	616-02-39000		RES,3.9K 5% 1/4W	ALLEN BRAD	RC07GF392J
R 50	1	616-02-91000		RES,9.1K 5% 1/4W	ALLEN BRAD	RC07GF912J
R 51	1	616-02-91000		RES,9.1K 5% 1/4W	ALLEN BRAD	RC07GF912J
R 52	1	616-02-27001		RES,27K 5% 1/4W	ALLEN BRAD	RC07GF273J
R 53	1	616-02-00000		RES 1/VAR 5% 1/4W		
R 54	1	616-02-02209		RES,22 OHM 5% 1/4W	ALLEN BRAD	RC07GF220J
R 55	1	605-09-49900	625	RES. 4.99K 1% 1/8W	EMR	605-09-49900
R 56	1	605-09-60409	625	RES. 604 OHM 1% 1/8W	EMR	605-09-60409
R 57	1	605-09-17800	625	RES. 1.78K 1% 1/8W	EMR	605-09-17800
R 58	1	605-09-26100	625	RES. 2.61K 1% 1/8W	EMR	605-09-26100
R 59	1	605-09-53401	625	RES. 53.4K 1% 1/8W	EMR	605-09-53401
R 60	1	616-02-02209		RES,22 OHM 5% 1/4W	ALLEN BRAD	RC07GF220J
R 61	1	616-02-02209		RES,22 OHM 5% 1/4W	ALLEN BRAD	RC07GF220J
R 62	1	605-09-13700	625	RES. 1.37K 1% 1/8W	EMR	605-09-13700
R 63	1	605-09-10030	625	RES. 1K 1% 1/8W	EMR	605-09-10000
R 64	1	605-09-80609	625	RES. 806 OHM 1% 1/8W	EMR	605-09-80609
R 65	1	605-09-56209	625	RES. 562 OHM 1% 1/8W	EMR	605-09-56209
R 66	1	616-02-02209		RES,22 OHM 5% 1/4W	ALLEN BRAD	RC07GF220J
R 67	1	616-02-02209		RES,22 OHM 5% 1/4W	ALLEN BRAD	RC07GF220J

FIRST USAGE MODEL 4147

ITEM NO.	QTY REQD	E M R NUMBER	DRAWING OR SPEC NO.	DESCRIPTION	VENDOR NAME	VENDOR PART NUMBER
R 68	1	616-02-47009		RES,470 OHM 5% 1/4W	ALLEN BRAD	RC07GF471J
R 69	1	616-02-47000		RES,4.7K 5% 1/4W	ALLEN BRAD	RC07GF472J
R 70	1	616-02-33009		RES,330 OHM 5% 1/4W	ALLEN BRAD	RC07GF331J
R 71	1	616-02-82000		RES,8.2K 5% 1/4W	ALLEN BRAD	RC07GF822J
R 72	1	616-02-27000		RES,2.7K 5% 1/4W	ALLEN BRAD	RC07GF272J
R 73	1	201-99-00033		POT,TMPR 5 K 10% 1W	MML 27	3810P-502
R 74	1	616-02-10001		RES,10K 5% 1/4W	ALLEN BRAD	RC07GF103J
R 75	1	616-02-18001		RES,18K 5% 1/4W	ALLEN BRAD	RC07GF183J
R 76	1	616-02-30000		RES,3K 5% 1/4W	ALLEN BRAD	RC07GF302J
R 77	1	616-02-30000		RES,3K 5% 1/4W	ALLEN BRAD	RC07GF302J
R 78	1	616-02-13001		RES,13K 5% 1/4W	ALLEN BRAD	RC07GF133J
R 79	1	616-02-56000		RES,5.6K 5% 1/4W	ALLEN BRAD	RC07GF562J
R 80	1	616-02-43000		RES,4.3K 5% 1/4W	ALLEN BRAD	RC07GF432J
R 81	1	616-02-30000		RES,3K 5% 1/4W	ALLEN BRAD	RC07GF302J
R 82	1	616-02-13001		RES,13K 5% 1/4W	ALLEN BRAD	RC07GF133J
R 83	1	616-02-02209		RES,22 OHM 5% 1/4W	ALLEN BRAD	RC07GF220J
R 84	1	616-02-02209		RES,22 OHM 5% 1/4W	ALLEN BRAD	RC07GF220J
R 85	1	616-02-13001		RES,13K 5% 1/4W	ALLEN BRAD	RC07GF133J
R 86	1	616-02-02209		RES,22 OHM 5% 1/4W	ALLEN BRAD	RC07GF220J
R 87	1	616-02-30000		RES,3K 5% 1/4W	ALLEN BRAD	RC07GF302J
R 88	1	616-02-20001		RES,20K 5% 1/4W	ALLEN BRAD	RC07GF203J
R 89	1	604-05-00000	624	RES, MTVAR 1% 1/10W		
R 90	1	616-02-20001		RES,20K 5% 1/4W	ALLEN BRAD	RC07GF203J
R 91	1	616-02-18001		RES,18K 5% 1/4W	ALLEN BRAD	RC07GF183J
R 92	1	616-02-10001		RES,10K 5% 1/4W	ALLEN BRAD	RC07GF103J
R 93	1	616-02-47000		RES,4.7K 5% 1/4W	ALLEN BRAD	RC07GF472J
R 94	1	616-02-62000		RES,6.2K 5% 1/4W	ALLEN BRAD	RC07GF622J
R 95	1	616-02-62000		RES,6.2K 5% 1/4W	ALLEN BRAD	RC07GF622J
R 96	1	616-02-30000		RES,3K 5% 1/4W	ALLEN BRAD	RC07GF302J
R 97	1	616-02-20001		RES,20K 5% 1/4W	ALLEN BRAD	RC07GF203J
R 98	1	604-01-00000	624	RES, MTVAR 1% 1/10W		
R 99	1	616-02-18001		RES,18K 5% 1/4W	ALLEN BRAD	RC07GF183J
R 100	1	616-02-10001		RES,10K 5% 1/4W	ALLEN BRAD	RC07GF103J
R 101	1	616-02-56000		RES,5.6K 5% 1/4W	ALLEN BRAD	RC07GF562J
R 102	1	616-02-62000		RES,6.2K 5% 1/4W	ALLEN BRAD	RC07GF622J
R 103	1	616-02-62000		RES,6.2K 5% 1/4W	ALLEN BRAD	RC07GF622J
R 104	1	616-02-47000		RES,4.7K 5% 1/4W	ALLEN BRAD	RC07GF472J
R 105	1	616-02-56000		RES,5.6K 5% 1/4W	ALLEN BRAD	RC07GF562J
R 106	1	616-02-27000		RES,2.7K 5% 1/4W	ALLEN BRAD	RC07GF272J
R 107	1	616-02-18001		RES,18K 5% 1/4W	ALLEN BRAD	RC07GF183J
R 108	1	616-02-36000		RES,3.6K 5% 1/4W	ALLEN BRAD	RC07GF362J
R 109	1	616-02-02209		RES,22 OHM 5% 1/4W	ALLEN BRAD	RC07GF220J
R 110	1	616-02-47000		RES,4.7K 5% 1/4W	ALLEN BRAD	RC07GF472J
R 111	1	616-02-10000		RES,1K 5% 1/4W	ALLEN BRAD	RC07GF102J
R 112	1	616-02-10000		RES,1K 5% 1/4W	ALLEN BRAD	RC07GF102J
R 113	1	616-02-47000		RES,4.7K 5% 1/4W	ALLEN BRAD	RC07GF472J
R 114	1	616-02-36001		RES,36K 5% 1/4W	ALLEN BRAD	RC07GF363J
R 115	1	616-02-36001		RES,36K 5% 1/4W	ALLEN BRAD	RC07GF363J
R 116	1	605-09-24900	625	RES, 2.49K 1% 1/8W	EMK	605-09-24900

FIRST USAGE MODEL 4142

ITEM NO.	QTY REQD	E M R NUMBER	DRAWING OR SPEC NO.	DESCRIPTION	VENDOR NAME	VENDOR PART NUMBER
R 117	1	616-02-10000		RES.1K 5% 1/4W	ALLEN BRAD	RC07GF102J
R 118	1	616-02-10000		RES.1K 5% 1/4W	ALLEN BRAD	RC07GF102J
R 119	1	CCO-CC-COOOO	624/625	RES.0T/VAR0		
R 120	1	CCC-CC-COCOO	624/625	RES.0T/VAR0		
R 121	1	616-02-51000		RES.5.1K 5% 1/4W	ALLEN BRAD	RC07GF512J
TP 1 THRU	3	143-98-00017		JACK,TEST PT,PW TYPE,RED	APP INC.	3-5A2340-2
TP 3						
Z 1	1	046-89-00010	12182	IC,ASSY,FOLLOWER,PNP	EMR	046-89-00010
Z 2	1	046-85-C0031	12181-1	IC,ASSY,FOLLOWER	EMR	046-89-C0031
Z 3	1	046-85-C0010	12182	IC,ASSY,FOLLOWER,PNP	EMR	046-89-C0010
Z 4	1	046-89-00031	12181-1	IC,ASSY,FOLLOWER	EMR	046-89-00031
REF 1	1	905-01-C053R	17403	SCHEMATIC,PWA,INPUT CARD	EMR	905-01-00538
REF 2	1	905-04-00002	55C0-1	SPEC,COMPONENT SPACING	EMR	905-04-00002

FIRST USAGE MODEL 4142

EMR - TELEMETRY

PARTS LIST 17390 REV DATE 10/07/76 REV LTR M

LIST TITLE PWA,BPIF SECTION I CHGE CONT NO. CODE IDENT SHT 1 OF 4
PART NO. 205-89-C0721 ECO 53843 06141 CKD BY

A5

ITEM NO.	QTY REQD	EMR NUMBER	DRAWING OR SPEC NO.	DESCRIPTION	VENDOR NAME	VENDOR PART NUMBER
1	1	204-89-C0280	17389	PWA,BPIF SECTION I	EMR	204-89-C0280
2	7	189-98-00004		PAD,XSTR & PINOUSE OPTL*	DEL BLINN	ICO-C00-NY
3	2	299-99-00005	6477-4	EJCTR,CAMD,.062RD,POSNS	EMR	299-99-00005
4	1	276-99-C0008	619-22	WIRE,#22,RUSS,SOLID	EMR	276-99-00008
5	1	301-11-00479		CAP,CR , 100V 4.7PF 10%	MML 48	8101-100-C0G-479K/MML
C 1	1	304-01-C0000	600	CAP.*I/VAR* .5PF 500V		
C 2	1	304-01-C0000	600	CAP.*I/VAR* .5PF 500V		
C 3	1	337-14-68003	601	CAP. 6.8PF 10% 35V	EMR	337-14-68003
C 4	1	337-14-68003	601	CAP. 6.8PF 10% 35V	EMR	337-14-68003
C 5	1	304-01-C0000	600	CAP.*I/VAR* .5PF 500V		
C 6	1	304-01-C0000	600	CAP.*I/VAR* .5PF 500V		
C 7	1	337-14-68003	601	CAP. 6.8PF 10% 35V	EMR	337-14-68003
C 8	1	304-11-C0000	600	CAP. *I/VAR*		
C 10	1	337-14-68003	601	CAP. 6.8PF 10% 35V	EMR	337-14-68003
C 12 THRU C 21	10	304-01-C0000	600	CAP.,*I/VAR* .5PF 500V		
C 24	1	304-01-C0000	600	CAP.*I/VAR* .5PF 500V		
C 25	1	304-01-C0000	600	CAP.*I/VAR* .5PF 500V		
C 27 THRU C 29	3	304-01-00000	600	CAP.*I/VAR* .5PF 500V		
C 30	1	304-08-C0000	600	CAP. *I/VAR*		
C 31	1	304-20-16009	600	CAP. 160PF 1% 500V	EMR	304-20-16009
C 32	1	304-01-C0000	600	CAP. *I/VAR*		
C 33	1	320-98-00006		CAP.,TRIM.,3-15PF 200V	MML 23	538-011,3-15PF,D
C 34	1	304-20-00C00	600	CAP. *I/VAR*		
C 35 THRU C 37	3	320-98-C0006		CAP.,TRIM.,3-15PF 200V	MML 23	538-011,3-15PF,D
C 38	1	304-08-C0000	600	CAP. *I/VAR*		
C 39	1	320-98-C0006		CAP.,TRIM.,3-15PF 200V	MML 23	538-011,3-15PF,D
C 40	1	307-01-17852	904	CAP., .1/85PF 1% 50V	EMR	707-01-17852
C 41	2	C00-CC-C0000	600	CAP.,*I/VAR* NOTES 3&4		
C 42	1	304-08-C3609	600	CAP. 36PF .5PF 500V	EMR	3C4-08-03609
C 43	1	320-98-00006		CAP.,TRIM.,3-15PF 200V	MML 23	538-011,3-15PF,D
C 44	1	707-01-16201	904	CAP., .0162MF 1% 50V	EMR	707-01-16201
C 45	2	CCC-CC-C0000	600	CAP.,*I/VAR* NOTES 3&4		
C 46	1	3C4-2C-C0000	600	CAP. *I/VAR*		
C 47	1	320-98-00006		CAP.,TRIM.,3-15PF 200V	MML 23	538-011,3-15PF,D
C 48	1	320-98-C0006		CAP.,TRIM.,3-15PF 200V	MML 23	538-011,3-15PF,D
C 49	1	3C4-2C-C0000	600	CAP. *I/VAR*		
C 52	1	337-14-68003	601	CAP. 6.8PF 10% 35V	EMR	337-14-68003
C 53	1	337-14-68003	601	CAP. 6.8PF 10% 35V	EMR	337-14-68003
C 54	1	3C4-C1-CC209	600	CAP. 2PF .5PF 500V	EMR	3C4-01-00209

FIRST USAGE MODEL 4142

ITEM NO.	QTY REQD	E M R NUMBER	DRAWING OR SPEC NO.	DESCRIPTION	VENDOR NAME	VENDOR PART NUMBER
C 55	1	304-01-C0000	600	CAP.*T/VAR* .5PF 500V		
C 60	1	384-C5-14002	949	CAP.. .1400MF 1% 50V	EMR	384-05-14002
C 61	1	707-01-12401	904	CAP.. .0124MF 1% 50V	EMR	707-01-12401
C 62	4	304-01-00000	600	CAP.*T/VAR* .5MF 500V		
THRU						
C 65						
C 66	1	337-14-68003	601	CAP. 6.8MF 10% 35V	EMR	337-14-68003
C 67	1	304-01-00000	600	CAP.*T/VAR* .5PF 500V		
C 68	4	304-CC-00000	600	CAP..*T/VAR*		
THRU						
C 71						
C 72	1	304-41-56009	600	CAP. 560PF 1% 300V	EMR	304-41-56009
CR 1	1	088-10-40040		DIODE,RECTIFIER 400V,1A !	JEDEC	1N4004
CR 2	1	088-10-40040		DIODE,RECTIFIER 400V,1A !	JEDEC	1N4004
CR 3	1	088-99-00169	663	DIODE,STABISTOR,1F .64V	EMR	088-99-00169
CR 4	1	088-99-00169	663	DIODE,STABISTOR,1F .64V	EMR	088-99-00169
CR 5	1	088-10-40040		DIODE,RECTIFIER 400V,1A !	JEDEC	1N4004
CR 6	1	088-99-00169	663	DIODE,STABISTOR,1F .64V	EMR	088-99-00169
K 1	13	219-99-00028	28531-21	RELAY,2 FORM A,GOLD CONT	EMR	219-99-00028
THRU						
K 13						
K 14	3	219-99-00033	28531-26	RELAY,3 FORM A,GOLD CONT	EMR	219-99-00033
THRU						
K 16						
K 17	1	219-98-00845 -00018		RELAY,2A RHOD CONT,26V	MATHAWAY	6563C-37/GP-2A-26P
K 18	1	219-99-00033	28531-26	RELAY,3 FORM A,GOLD CONT	EMR	219-99-00033
K 19	1	219-99-00033	28531-26	RELAY,3 FORM A,GOLD CONT	EMR	219-99-00033
K 20	1	219-98-00845 -00018		RELAY,2A RHOD CONT,26V	MATHAWAY	6563C-37/GP-2A-26P
K 21	1	219-98-00845		RELAY,2A RHOD CONT,26V	MATHAWAY	6563C-37/GP-2A-26P
K 22	1	219-99-00028	28531-21	RELAY,2 FORM A,GOLD CONT	EMR	219-99-00028
L 1	1	055-89-00001	956-1306	L,ASSY	EMR	055-89-00001
L 2	1	055-85-00001	956-1306	L,ASSY	EMR	055-89-00001
Q 9	1	263-10-39470		XSTR,NPN 40V SW-AMPL,HFE	JEDEC	2N3947
Q 10	1	263-10-39470		XSTR,NPN 40V SW-AMPL,HFE	JEDEC	2N3947
Q 11	1	263-97-00093		XSTR,PNP,SWITCH/AMPL,50V	MPL 4	2N3251/2N3251A
Q 12	3	263-10-39470		XSTR,NPN 40V SW-AMPL,HFE	JEDEC	2N3947
THRU						
Q 14						
Q 15	1	263-97-00093		XSTR,PNP,SWITCH/AMPL,50V	MPL 4	2N3251/2N3251A
R 1	1	616-02-02209		RES,22 OHM 5% 1/4W	ALLEN BRAD	RC07GF220J
R 2	1	616-02-02209		RES,22 OHM 5% 1/4W	ALLEN BRAD	RC07GF220J
R 3	1	605-09-10000	625	RES. 1K 1% 1/8W	EMR	605-09-10000
R 4	1	605-09-10000	625	RES. 1K 1% 1/8W	EMR	605-09-10000
R 7	1	605-09-37409	625	RES. 374 OHM 1% 1/8W	EMR	605-09-37409
R 11	1	605-09-10001	625	RES. 10.0K 1% 1/8W	EMR	605-09-10001
R 12	1	605-09-10001	625	RES. 10.0K 1% 1/8W	EMR	605-09-10001
R 14	1	616-02-02209		RES,22 OHM 5% 1/4W	ALLEN BRAD	RC07GF220J
R 16	1	605-09-49900	625	RES. 4.99K 1% 1/8W	EMR	605-09-49900
R 17	1	605-09-49900	625	RES. 4.99K 1% 1/8W	EMR	605-09-49900

FIRST USAGE MODEL 4142

ITEM NO.	QTY REQD	E M R NUMBER	DRAWING OR SPEC NO.	DESCRIPTION	VENDOR NAME	VENDOR PART NUMBER
R 18	1	605-09-24900	625	RES. 2.49K 1% 1/8W	EMR	605-09-24900
R 19	1	605-09-24900	625	RES. 2.49K 1% 1/8W	EMR	605-09-24900
R 27	1	616-02-05109		RES,51 OHM 5% 1/4W	ALLEN BRAD	RC07GF510J
R 28	1	605-09-24900	625	RES. 2.49K 1% 1/8W	EMR	605-09-24900
R 29	1	605-09-24900	625	RES. 2.49K 1% 1/8W	EMR	605-09-24900
R 30	1	616-02-02209		RES,22 OHM 5% 1/4W	ALLEN BRAD	RC07GF220J
R 31	1	616-02-02209		RES,22 OHM 5% 1/4W	ALLEN BRAD	RC07GF220J
R 32	1	605-09-12400	625	RES. 1.24K 1% 1/8W	EMR	605-09-12400
R 33	1	605-09-12400	625	RES. 1.24K 1% 1/8W	EMR	605-09-12400
R 34	1	605-09-10002	625	RES. 100K 1% 1/8W	EMR	605-09-10002
R 35	1	605-09-10002	625	RES. 100K 1% 1/8W	EMR	605-09-10002
R 36	1	605-09-49901	625	RES. 49.9K 1% 1/8W	EMR	605-09-49901
R 37	1	605-09-49901	625	RES. 49.9K 1% 1/8W	EMR	605-09-49901
R 38	1	616-02-33000		RES,3.3K 5% 1/4W	ALLEN BRAD	RC07GF332J
R 39	1	616-02-12000		RES,1.2K 5% 1/4W	ALLEN BRAD	RC07GF122J
R 40	1	616-02-75000		RES,7.5K 5% 1/4W	ALLEN BRAD	RC07GF752J
R 41	1	605-09-24901	625	RES. 24.9K 1% 1/8W	EMR	605-09-24901
R 42	1	605-09-24901	625	RES. 24.9K 1% 1/8W	EMR	605-09-24901
R 43	1	616-02-22009		RES,220 OHM 5% 1/4W	ALLEN BRAD	RC07GF221J
R 44	1	616-02-18009		RES,180 OHM 5% 1/4W	ALLEN BRAD	RC07GF181J
R 45	1	605-09-12401	625	RES. 12.4K 1% 1/8W	EMR	605-09-12401
R 46	1	605-09-12401	625	RES. 12.4K 1% 1/8W	EMR	605-09-12401
R 47	1	616-02-01009		RES,10 OHM 5% 1/4W	ALLEN BRAD	RC07GF100J
R 48	1	616-02-01009		RES,10 OHM 5% 1/4W	ALLEN BRAD	RC07GF100J
R 49	1	616-02-CC000		RES.0T/VAR* 5% 1/4W		
R 50	1	605-09-46400	625	RES. 4.64K 1% 1/8W	EMR	605-09-46400
R 51	1	616-02-05109		RES,51 OHM 5% 1/4W	ALLEN BRAD	RC07GF510J
R 52	1	616-02-05109		RES,51 OHM 5% 1/4W	ALLEN BRAD	RC07GF510J
R 53	1	616-02-22009		RES,220 OHM 5% 1/4W	ALLEN BRAD	RC07GF221J
R 54	1	605-09-24900	625	RES. 2.49K 1% 1/8W	EMR	605-09-24900
R 55	1	616-02-56009		RES,560 OHM 5% 1/4W	ALLEN BRAD	RC07GF561J
R 56	1	616-02-10003		RES,1 MEG 5% 1/4W	ALLEN BRAD	RC07GF105J
R 57	1	616-02-10003		RES,1 MEG 5% 1/4W	ALLEN BRAD	RC07GF105J
R 58	1	616-02-13001		RES,13K 5% 1/4W	ALLEN BRAD	RC07GF133J
R 59	1	616-02-51002		RES,510K 5% 1/4W	ALLEN BRAD	RC07GF514J
R 60	1	616-02-51002		RES,510K 5% 1/4W	ALLEN BRAD	RC07GF514J
R 61	1	616-02-24002		RES,240K 5% 1/4W	ALLEN BRAD	RC07GF244J
R 62	1	616-02-24002		RES,240K 5% 1/4W	ALLEN BRAD	RC07GF244J
R 63	1	616-02-12002		RES,120K 5% 1/4W	ALLEN BRAD	RC07GF124J
R 64	1	616-02-12002		RES,120K 5% 1/4W	ALLEN BRAD	RC07GF124J
R 65	1	605-09-28000	625	RES. 2.8K 1% 1/8W	EMR	605-09-28000
R 66	1	605-09-16900	625	RES. 1.69K 1% 1/8W	EMR	605-09-16900
R 67	1	605-09-34000	625	RES. 3.40K 1% 1/8W	EMR	605-09-34000
R 68	1	605-09-49900	625	RES. 4.99K 1% 1/8W	EMR	605-09-49900
R 69	1	616-02-05109		RES,51 OHM 5% 1/4W	ALLEN BRAD	RC07GF510J
R 70	1	616-02-33000		RES,3.3K 5% 1/4W	ALLEN BRAD	RC07GF332J
R 71	1	616-02-02209		RES,22 OHM 5% 1/4W	ALLEN BRAD	RC07GF220J
R 72	1	616-02-CC000		RES.0T/VAR* 5% 1/4W		
R 73	1	616-02-CC000		RES.0T/VAR* 5% 1/4W		

FIRST USAGE MODEL 4142

ITEM NO.	QTY REQD	E M R NUMBER	DRAWING OR SPEC NO.	DESCRIPTION	VENDOR NAME	VENDOR PART NUMBER
R 74	1	616-02-39000		RES,3.9K 5% 1/4W	ALLEN BRAD	RC07GF392J
R 75	1	616-02-43009		RES. 430 OHM 5% 1/4W	ALLEN BRAD	RC07GF431J
TP 1	1	143-98-C0017		JACK,TEST PT.PW TYPE,RED	AMP INC.	3-582340-2
TP 2	1	143-98-C0017		JACK,TEST PT.PW TYPE,RED	AMP INC.	3-582340-2
Z 1	1	046-89-00009	12181	IC,ASSY,FOLLOWER,NPN	EMR	046-89-00009
Z 2	1	046-89-00010	12182	IC,ASSY,FOLLOWER,PNP	EMR	046-89-00010
REF 1	1	905-C1-C0542	17188	SCHEMATIC,PWA,BPIF SECT 1	EMR	9C5-C1-00542
REF 2	1	905-C4-C0001	5500	SPEC,COMPONENT SPACING	EMR	9C5-04-C0001

FIRST USAGE MODEL 4142

A6

EMR - TELEMETRY

PARTS LIST 17193 REV DATE 04/12/76 REV LTR S

LIST TITLE PWA,BPIF SECTION 2 CHGE CONT NO. CODE IDENT SHT 1 OF 4
PART NO. 205-89-C0722 ECO RECORD 3 06141 CKD BY

ITEM NO.	QTY REQD	EMR NUMBER	DRAWING OR SPEC NO.	DESCRIPTION	VENDOR NAME	VENDOR PART NUMBER
1	1	204-89-00278	17392	PWB,BPIF SECTION 2	EMR	204-89-00278
2	7	189-98-00004		PAD,XSTR 4 PINHOUSE OPTL*	DEL BLINN	100-000-MY
3	2	299-99-00006	6477-5	EJCTR,CAMD,.062BD,POSN6	EMR	299-99-00006
4	1	276-99-C0008	619-22	WIRE,022,NUSS,SOLID	EMR	276-99-C0008
5	1	301-11-00479		CAP,CR , 100V 4.7PF 10%	MML 48	8101-100-COG-479K/MML
C 1	1	304-01-00000	600	CAP.,,*T/VAR*		
C 2	1	304-01-CC000	600	CAP.,,*T/VAR*		
C 3	1	337-14-68003	601	CAP. 6.8MF 10% 35V	EMR	337-14-68003
C 4	1	337-14-68003	601	CAP. 6.8MF 10% 35V	EMR	337-14-68003
C 5	1	304-01-CC000	600	CAP.,,*T/VAR*		
C 6	1	304-01-0C000	600	CAP.,,*T/VAR*		
C 7	1	337-14-68003	601	CAP. 6.8MF 10% 35V	EMR	337-14-68003
C 8	1	304-01-00000	600	CAP. *T/VAR* .5PF 500V		
C 10	1	337-14-68003	601	CAP. 6.8MF 10% 35V	EMR	337-14-68003
C 12	10	304-01-C0000	600	CAP.,,*T/VAR*		
THRU						
C 21						
C 24	1	304-01-0C000	600	CAP.,,*T/VAR*		
C 25	1	304-01-00000	600	CAP.,,*T/VAR*		
C 27	1	304-01-0C000	600	CAP.,,*T/VAR*		
THRU						
C 29						
C 30	3	304-20-00000	600	CAP.,,*T/VAR*		
THRU						
C 32						
C 33	1	320-98-00006		CAP.,,TRIM.,3-15PF 200V	MML 23	538-011,3-15PF,D
C 34	1	304-13-C0000	600	CAP.,,*T/VAR*		
C 35	1	320-98-C0006		CAP.,,TRIM.,3-15PF 200V	MML 23	538-011,3-15PF,D
THRU						
C 37						
C 38	1	304-20-C0000	600	CAP. *T/VAR*		
C 39	1	320-98-00006		CAP.,,TRIM.,3-15PF 200V	MML 23	538-011,3-15PF,D
C 40	1	707-01-27002	904	CAP.,, .27MF 1% 50V	EMR	707-01-27002
C 41	2	CCC-CC-CC000	600	CAP.,,*T/VAR*SEE NOTES 3C4		
C 42	1	304-13-C0000	600	CAP. *T/VAR*		
C 43	1	320-98-00006		CAP.,,TRIM.,3-15PF 200V	MML 23	538-011,3-15PF,D
C 44	1	707-01-24201	9C4	CAP.,, .0242MF 1% 50V	EMR	707-01-24201
C 45	2	C0C-0C-00000	600	CAP.,,*T/VAR*SEE NOTES 3C4		
C 46	1	304-20-CC000	600	CAP.,,*T/VAR*		
C 47	1	320-98-C0006		CAP.,,TRIM.,3-15PF 200V	MML 23	538-011,3-15PF,D
C 48	1	320-98-C0006		CAP.,,TRIM.,3-15PF 200V	MML 23	538-011,3-15PF,D
C 49	1	304-20-12009	600	CAP. 120PF 1% 500V	EMR	304-20-12009
C 52	1	337-14-68003	601	CAP. 6.8MF 10% 35V	EMR	337-14-68003
C 53	1	337-14-68003	601	CAP. 6.8MF 10% 35V	EMR	337-14-68003
C 54	1	304-01-00000	600	CAP.,,*T/VAR*		

FIRST USAGE MODEL 4162

ITEM NO.	QTY REQD	E M R NUMBER	DRAWING OR SPEC NO.	DESCRIPTION	VENDOR NAME	VENDOR PART NUMBER
C 55	1	304-01-00000	600	CAP.,,PT/VAR*		
C 60	1	707-01-15102	904	CAP.,, .15MF 1% 50V	EMR	707-01-15102
C 61	1	707-01-13701	904	CAP.,, .0137MF 1% 50V	EMR	7C7-01-13701
C 62	1	337-14-68003	601	CAP. 6.8MF 10% 35V	EMR	337-14-68003
C 64	1	304-00-CC000	600	CAP, PT VAR*		
C 65	1	304-CC-CC000	600	CAP, PT VAR*		
C 66	1	304-41-56009	600	CAP. 560PF 1% 300V	EMR	304-41-56009
CR 1	1	088-10-40040		DIODE,RECTIFIER 400V,1A I	JEDEC	1N4004
CR 2	1	088-10-40040		DIODE,RECTIFIER 400V,1A I	JEDEC	1N4004
CR 3	1	088-99-00169	663	DIODE,STABISTOR,IF .64V	EMR	088-99-00169
CR 4	1	088-99-00169	663	DIODE,STABISTOR,IF .64V	EMR	088-99-00169
CR 5	1	088-10-40040		DIODE,RECTIFIER 400V,1A I	JEDEC	1N4004
CR 6	1	088-99-00169	663	DIODE,STABISTOR,IF .64V	EMR	088-99-00169
K 1 THRU	13	219-99-00028	28531-21	RELAY,2 FORM A,GOLD CONT	EMR	219-99-00028
K 13						
K 14 THRU	3	219-99-00033	28531-26	RELAY,3 FORM A,GOLD CONT	EMR	219-99-00033
K 16						
K 17	1	219-98-00045		RELAY,2A RHOD CONT,26V	MATHAWAY	65610-37/GP-2A-26P
K 18	1	219-99-00033	28531-26	RELAY,3 FORM A,GOLD CONT	EMR	219-99-00033
K 19	1	219-99-00033	28531-26	RELAY,3 FORM A,GOLD CONT	EMR	219-99-00033
K 20	1	219-98-00045		RELAY,2A RHOD CONT,26V	MATHAWAY	65610-37/GP-2A-26P
K 21	1	219-98-00045		RELAY,2A RHOD CONT,26V	MATHAWAY	65610-37/GP-2A-26P
K 22	1	219-99-00028	28531-21	RELAY,2 FORM A,GOLD CONT	EMR	219-99-00028
L 1	1	055-89-00001	956-1306	L,ASSY	EMR	055-89-00001
L 2	1	055-89-00001	956-1306	L,ASSY	EMR	055-89-00001
L 3	1	044-98-CC006		CHOKE,FERRITE,0.75K/50MHZ	FERROXCUBE	VK200 10/3B
Q 9	1	263-10-19470		XSTR,NPN 40V SW-AMPL,HFE	JEDEC	2N3947
Q 10	1	263-10-19470		XSTR,NPN 40V SW-AMPL,HFE	JEDEC	2N3947
Q 11	1	263-97-00093		XSTR,PNP,SWITCH/AMPL,50V	MML 4	2N3251/2N3251A
Q 12 THRU	3	263-10-19470		XSTR,NPN 40V SW-AMPL,HFE	JEDEC	2N3947
Q 14						
Q 15	1	263-97-00093		XSTR,PNP,SWITCH/APPL,50V	MML 4	2N3251/2N3251A
R 1	1	616-C2-02209		RES,22 OHM 5% 1/4W	ALLEN BRAD	RC07GF220J
R 2	1	616-02-02209		RES,22 OHM 5% 1/4W	ALLEN BRAD	RC07GF220J
R 3	1	605-09-10000	625	RES. 1K 1% 1/8W	EMR	605-09-10000
R 4	1	605-09-10000	625	RES. 1K 1% 1/8W	EMR	605-09-10000
R 7	1	605-C9-45309	625	RES. 453 OHM 1% 1/8W	EMR	605-C9-45309
R 11	1	605-09-10001	625	RES. 10.0K 1% 1/8W	EMR	605-09-10001
R 12	1	605-09-10001	625	RES. 10.0K 1% 1/8W	EMR	605-09-10001
R 14	1	616-C2-02209		RES,22 OHM 5% 1/4W	ALLEN BRAD	RC07GF220J
R 16	1	605-C9-49900	625	RES. 4.99K 1% 1/8W	EMR	605-09-49900
R 17	1	605-09-49900	625	RES. 4.99K 1% 1/8W	EMR	605-09-49900
R 19	1	605-09-24900	625	RES. 2.49K 1% 1/8W	EMR	605-09-24900
R 27	1	616-02-05109		RES,51 OHM 5% 1/4W	ALLEN BRAD	RC07GF510J
R 28	1	605-09-24900	625	RES. 2.49K 1% 1/8W	EMR	605-09-24900
R 29	1	605-C9-24900	625	RES. 2.49K 1% 1/8W	EMR	605-09-24900

FIRST USAGE MODEL 4142

ITEM NO.	QTY REQD	E M R NUMBER	DRAWING OR SPEC NO.	DESCRIPTION	VENDOR NAME	VENDOR PART NUMBER
R 30	1	616-02-02209		RES,22 OHM 5% 1/4W	ALLEN BRAD	RC07GF220J
R 31	1	616-02-02209		RES,22 OHM 5% 1/4W	ALLEN BRAD	RC07GF220J
R 32	1	605-09-12400	625	RES. 1.24K 1% 1/8W	EMR	605-09-12400
R 33	1	605-09-12400	625	RES. 1.24K 1% 1/8W	EMR	605-09-12400
R 34	1	605-09-10002	625	RES. 100K 1% 1/8W	EMR	605-09-10002
R 35	1	605-09-10002	625	RES. 100K 1% 1/8W	EMR	605-09-10002
R 36	1	605-09-49901	625	RES. 49.9K 1% 1/8W	EMR	605-09-49901
R 37	1	605-09-49901	625	RES. 49.9K 1% 1/8W	EMR	605-09-49901
R 38	1	616-02-33000		RES,3.3K 5% 1/4W	ALLEN BRAD	RC07GF332J
R 39	1	616-02-12000		RES,1.2K 5% 1/4W	ALLEN BRAD	RC07GF122J
R 40	1	616-02-75000		RES,7.5K 5% 1/4W	ALLEN BRAD	RC07GF752J
R 41	1	605-09-24901	625	RES. 24.9K 1% 1/8W	EMR	605-09-24901
R 42	1	605-09-24901	625	RES. 24.9K 1% 1/8W	EMR	605-09-24901
R 43	1	616-02-05109		RES,51 OHM 5% 1/4W	ALLEN BRAD	RC07GF510J
R 44	1	616-02-39000		RES,3.9K 5% 1/4W	ALLEN BRAD	RC07GF392J
R 45	1	605-09-12401	625	RES. 12.4K 1% 1/8W	EMR	605-09-12401
R 46	1	605-09-12401	625	RES. 12.4K 1% 1/8W	EMR	605-09-12401
R 47	1	616-02-01009		RES,10 OHM 5% 1/4W	ALLEN BRAD	RC07GF100J
R 48	1	616-02-01009		RES,10 OHM 5% 1/4W	ALLEN BRAD	RC07GF100J
R 49	1	616-02-CC000		RES,0T/VARO 5% 1/4W		
R 50	1	605-09-34800	625	RES. 3.48K 1% 1/8W	EMR	605-09-34900
R 51	1	616-02-05109		RES,51 OHM 5% 1/4W	ALLEN BRAD	RC07GF510J
THRU R 53						
R 54	1	605-09-24900	625	RES. 2.49K 1% 1/8W	EMR	605-09-24900
R 55	1	616-02-56009		RES,560 OHM 5% 1/4W	ALLEN BRAD	RC07GF561J
R 56	1	616-02-10004		RES,1 MEG 5% 1/4W	ALLEN BRAD	RC07GF105J
R 57	1	616-02-10003		RES,1 MEG 5% 1/4W	ALLEN BRAD	RC07GF105J
R 58	1	616-02-13001		RES,13K 5% 1/4W	ALLEN BRAD	RC07GF133J
R 59	1	616-02-51002		RES,510K 5% 1/4W	ALLEN BRAD	RC07GF514J
R 60	1	616-02-51002		RES,510K 5% 1/4W	ALLEN BRAD	RC07GF514J
R 61	1	616-02-24002		RES,240K 5% 1/4W	ALLEN BRAD	RC07GF244J
R 62	1	616-02-24002		RES,240K 5% 1/4W	ALLEN BRAD	RC07GF244J
R 63	1	616-02-12002		RES,120K 5% 1/4W	ALLEN BRAD	RC07GF124J
R 64	1	616-02-12002		RES,120K 5% 1/4W	ALLEN BRAD	RC07GF124J
R 65	1	605-09-63400	625	RES. 6.34K 1% 1/8W	EMR	605-09-63400
R 66	1	605-09-28000	625	RES. 2.8K 1% 1/8W	EMR	605-09-28000
R 67	1	605-09-78700	625	RES. 7.87K 1% 1/8W	EMR	605-09-78700
R 68	1	605-09-10001	625	RES. 10.0K 1% 1/8W	EMR	605-09-10001
R 69	1	616-02-05109		RES,51 OHM 5% 1/4W	ALLEN BRAD	RC07GF510J
R 70	1	616-02-33000		RES,3.3K 5% 1/4W	ALLEN BRAD	RC07GF332J
R 71	1	616-02-02203		RES,22 OHM 5% 1/4W	ALLEN BRAD	RC07GF220J
R 72	1	616-02-CC000		RES,0T/VARO		
R 73	1	616-02-CC000		RES,0T/VARO		
R 74	1	616-02-01009		RES,10 OHM 5% 1/4W	ALLEN BRAD	RC07GF100J
R 75	1	616-02-01009		RES,10 OHM 5% 1/4W	ALLEN BRAD	RC07GF100J
TP 1	1	343-98-00017		JACK,TEST PT,PW TYPE,RED	AMP INC.	3-5R2346-2
TP 2	1	343-98-00017		JACK,TEST PT,PW TYPE,RED	AMP INC.	3-5R2346-2
Z 1	1	046-85-C0009	12181	IC,ASSY,FOLLOWER,4PN	EMR	046-85-C0009

FIRST USAGE MODEL 4147

205-89-00722 17393 SHT 4 OF 4

ITEM NO.	QTY REQD	E M R NUMBER	DRAWING OR SPEC NO.	DESCRIPTION	VENDOR NAME	VENDOR PART NUMBER
2	1	046-89-00010	12182	IC,ASSY,FOLLOWER,PNP	EMR	046-89-00010
REF 1	1	905-01-00543	17391	SCHEMATIC,PWA,BPIF SECT 2	EMR	905-01-00543
REF 2	1	905-04-00001	9500	SPEC,COMPONENT SPACING	EMR	905-04-00001

FIRST USAGE MODEL 4142

A7

EMR - TELEMETRY

PARTS LIST 17402 REV DATE 05/19/77 REV LTR S

LIST TITLE PWA,TAPE SPEED COMPEN CNGE CONT NO. CODE IDENT SHT 1 OF 2
PART NO. 205-89-00723 ECO 55031 06141 CHD BY

ITEM NO.	QTY REQD	EMR NUMBER	DRAWING OR SPEC NO.	DESCRIPTION	VENDOR NAME	VENDOR PART NUMBER
1	1	204-89-00284	17401	PWB,TAPE SP COMPEN CARD	EMR	204-89-00284
2	2	299-99-00007	6477-6	EJCTR,CARD,.062BD,PCSNT	EMR	299-99-00007
3	AR	276-99-00008	619-22	WIRE,#22,BUSS,SOLID	EMR	276-99-00008
C 1	1	337-14-68003	601	CAP. 6.8MF 10% 35V	EMR	337-14-68003
C 2	1	337-14-68003	601	CAP. 6.8MF 10% 35V	EMR	337-14-68003
C 3	1	707-01-62002	904	CAP.. .620MF 1% 50V	EMR	707-01-62002
C 4	1	707-01-62001	904	CAP.. .0620PF 1% 50V	EMR	707-01-62001
C 5	1	305-41-56000	600	CAP..5600PF 1% 300V	EMR	305-41-56000
C 6	1	304-20-50009	600	CAP. 500PF 1% 500V	EMR	304-20-50009
C 7 THRU C 11	5	337-14-68003	601	CAP. 6.8MF 10% 35V	EMR	337-14-68003
C 12	1	304-13-06809	600	CAP. 68PF 1% 500V	EMR	304-13-06809
C 13	1	304-01-01009	600	CAP. 10PF .5PF 500V	EMR	304-01-01009
C 14	1	301-13-10002		CAP,CR , 50V .100 UF 20%	MML 48	8131-050-651-104M/MML
C 15	1	301-13-10002		CAP,CR , 50V .100 UF 20%	MML 48	8131-050-651-104M/MML
C 16	1	304-CC-C0000	600	CAP, #IVAR*		
CR 1 THRU CR 19	19	088-10-41480		DIODE,SW,75V/5UA,4NS/10MA	JEDEC	1N4148
CR 21 THRU CR 23	3	088-10-41480		DIODE,SW,75V/5UA,4NS/10MA	JEDEC	1N4148
K 1 THRU K 13	13	219-99-00027	28531-20	RELAY,1 FORM A,GOLD CONT	EMR	219-99-00027
K 14	1	219-98-00054 → 900083		RELAY,1A MMOD CONT,26V	HATHAWAY	6563C-36/GP-1A-26P
K 16 THRU K 19	4	219-99-00027	28531-20	RELAY,1 FORM A,GOLD CONT	EMR	219-99-00027
K 21 THRU K 23	3	219-99-00027	28531-20	RELAY,1 FORM A,GOLD CONT	EMR	219-99-00027
R 1	1	616-02-27001		RES,27K 5% 1/4W	ALLEN BRAD	RC07GF273J
R 2	1	616-02-47001		RES,47K 5% 1/4W	ALLEN BRAD	RC07GF473J
R 3	1	616-02-02209		RES,22 OHM 5% 1/4W	ALLEN BRAD	RC07GF220J
R 4	1	616-02-02209		RES,22 OHM 5% 1/4W	ALLEN BRAD	RC07GF220J
R 5	1	608-09-49901	624	RES, 49.9K 1% 1/10W	EMR	608-09-49901
R 6	1	608-09-24901	624	RES, 24.9K 1% 1/10W	EMR	608-09-24901
R 7	1	608-09-12401	624	RES, 12.4K 1% 1/10W	EMR	608-09-12401
R 8	1	608-09-61900	624	RES, 6.19K 1% 1/10W	EMR	608-09-61900
R 9	1	608-01-49902	624	RES, 499K 1% 1/10W 100 PP	EMR	608-01-49902
R 10	1	608-09-24902	624	RES, 249.0K 1% 1/10W	EMR	608-09-24902

FIRST USAGE MODEL 4147

ITEM NO.	QTY REQD	E M R NUMBER	DRAWING OR SPEC NO.	DESCRIPTION	VENDOR NAME	VENDOR PART NUMBER
R 11	1	608-C9-12402	624	RES, 124.0K 1% 1/10W	EMR	608-09-12402
R 12	1	608-09-61901	624	RES, 61.9K 1% 1/10W	EMR	608-09-61901
R 13	1	616-02-51003		RES,5.1 MEG 5% 1/4W	ALLEN BRAD	RC07GF515J
R 14	1	616-02-24003		RES,2.4 MEG 5% 1/4W	ALLEN BRAD	RC07GF245J
R 15	1	616-02-12003		RES,1.2 MEG 5% 1/4W	ALLEN BRAD	RC07GF125J
R 16	1	616-02-62007		RES,620K 5% 1/4W	ALLEN BRAD	RC07GF624J
R 17	1	608-09-49900	624	RES, 4.99K 1% 1/10W	EMR	608-09-49900
R 18	1	616-02-02239		RES,22 OHM 5% 1/4W	ALLEN BRAD	RC07GF220J
R 19	1	616-02-02209		RES,22 OHM 5% 1/4W	ALLEN BRAD	RC07GF220J
R 20	1	608-09-10001	624	RES, 10K 1% 1/10W	EMR	608-09-10001
R 21	1	616-02-02209		RES,22 OHM 5% 1/4W	ALLEN BRAD	RC07GF220J
R 22	1	616-02-02209		RES,22 OHM 5% 1/4W	ALLEN BRAD	RC07GF220J
R 23	1	608-09-57609	624	RES, 576.0 OHM 1% 1/10W	EMR	608-09-57609
R 24	1	608-09-15401	624	RES, 15.4K 1% 1/10W	EMR	608-09-15401
R 25	1	608-09-33201	624	RES, 33.2K 1% 1/10W	EMR	608-09-33201
R 27	1	608-09-41201	624	RES, 41.2K 1% 1/10W	EMR	608-09-41201
R 28	3	616-02-CC000		RES,.01/VAR0 5% 1/4W		
THRU						
R 30						
R 31	4	201-98-00063		POT,TRMR, 20 K 10% .5W	BECK/MML27	62PM20K
THRU						
R 34						
R 35	1	608-01-10000	624	RES, 1.0K 1% 1/10W	EMR	608-01-10000
R 36	1	608-01-90909	624	RES, 909 OHMS 1% 1/10W	EMR	608-01-90909
R 37	1	201-98-00062		POT,TRMR,200 OHM 10% .5W	BECK/MML27	62PR200
R 38	1	608-09-49909	624	RES, 499.0 OHM 1% 1/10W	EMR	608-09-49909
R 39	1	201-98-00165		POT,TRMR,1.0 MEG 20% .5W	BECK/MML27	62PR1MEG
R 40	1	616-02-39003		RES,3.9 MEG 5% 1/4W	ALLEN BRAD	RC07GF395J
R 41	1	616-02-01009		RES,10 OHM 5% 1/4W	ALLEN BRAD	RC07GF100J
R 42	1	616-02-01009		RES,10 OHM 5% 1/4W	ALLEN BRAD	RC07GF100J
R 43	3	616-02-C0000		RES,.01/VAR0 5% 1/4W		
THRU						
R 45						
Z 1	1	046-89-C0010	12182	IC,ASSY,FOLLOWER,PNP	EMR	046-89-00010
Z 2	1	046-89-C0032	12181-2	IC,ASSY,FOLLOWER,NPN	EMR	046-89-00032
Z 3	1	046-89-C0032	12181-2	IC,ASSY,FOLLOWER,NPN	EMR	046-89-00032
Z 4	1	046-34-C0004		IC,LIN AMPL,UPNL	MML 40	LM301AH
REF 1	1	905-C1-C0544	17402	SCHEMATIC,PWA	EMR	905-C1-00544
REF 2	1	905-04-C0002	95C0-1	SPEC,COMPONENT SPACING	EMR	905-04-00002

FIRST USAGE MODEL 4147

A8

EMR - TELEMETRY

PARTS LIST 17396 REV DATE 04/16/76 REV LTR Y

LIST TITLE PWA,LMTR,DET,SINGLE POLE CHGE CONT NO. CODE IDENT SHT 1 OF 5
PART NO. 205-89-C0110 ECO RECORD S 06141 CKD BY

ITEM NO.	QTY REQD	EMR NUMBER	DRAWING OR SPEC NO.	DESCRIPTION	VENDOR NAME	VENDOR PART NUMBER
1	1	204-99-C0279	17395	PWB,LMTR, DET SINGLE POLE	EMR	204-89-C0279
2	13	189-98-00004		PAD,XSTR & PINHOLE OPTL	DEL BLINN	100-000-NY
3	2	299-99-00008	6477-7	EJCTR,CAND,.062RD,PCSNB	EMR	299-99-00008
4	2	189-98-00016		PAD,XSTR,TO-5 8PIN,.075H	MILTON ROSS	10269-4
5	2	229-02-00065		SCREW,2-56X1/4 PAN HD	PRCMT OPTION	MS51957-3
6	2	273-02-00003		WASHER,#2, FLT ST STL	PRCMT OPTION	MS15795-802
7	2	273-02-00024		WASHER,#2,INT TOOTH	PRCMT OPTION	MS35333-69
13	AR	276-99-00009	619-22	WIRE,#22,BUSS,SOLID	EMR	276-99-00008
14	AR	268-02-00039		TUBING,#22,EXTR TFE,CLEAR	PRCMT OPTION	MIL-I-22129
15	1	205-89-C1014	21777	PWA, DETECTOR SWITCHES	EMR	205-89-01014
16	1	140-99-C0136	21969	INS,.25X.75 .062THK G10	EMR	140-99-C0136
17	AR	069-12-00004		CMPD,SEALANT,GENL PURPOSE	G.E.	RTV-102
C 1	1	337-12-22004	601	CAP., 22PF 10% 15V	EMR	337-12-22004
C 2	1	337-12-22004	601	CAP., 22PF 10% 15V	EMR	337-12-22004
C 3	4	301-13-10002		CAP,CR , 50V .100 UF 20%	MRL 48	8131-050-651-104M/MRL
THRU						
C 6						
C 7	1	301-23-27003		CAP,CR , 50V 2.7 UF 20%	MRL 48	8141-050-651-275M/MRL
C 8	1	301-23-27003		CAP,CR , 50V 2.7 UF 20%	MRL 48	8141-050-651-275M/MRL
C 9	1	301-13-10002		CAP,CR , 50V .100 UF 20%	MRL 48	8131-050-651-104M/MRL
C 10	1	301-13-10002		CAP,CR , 50V .100 UF 20%	MRL 48	8131-050-651-104M/MRL
C 11	1	301-23-27003		CAP,CR , 50V 2.7 UF 20%	MRL 48	8141-050-651-275M/MRL
C 12	1	301-23-27003		CAP,CR , 50V 2.7 UF 20%	MRL 48	8141-050-651-275M/MRL
C 13	1	301-13-10003		CAP,CR , 50V 1.00UF 20%	MRL 48	8131-050-651-105M/MRL
C 14	1	301-13-10002		CAP,CR , 50V .100 UF 20%	MRL 48	8131-050-651-104M/MRL
C 15	1	301-13-10002		CAP,CR , 50V .100 UF 20%	MRL 48	8131-050-651-104M/MRL
C 16	1	337-12-22004	601	CAP., 22PF 10% 15V	EMR	337-12-22004
C 17	1	301-13-10002		CAP,CR , 50V .100 UF 20%	MRL 48	8131-050-651-104M/MRL
C 18	1	301-13-10002		CAP,CR , 50V .100 UF 20%	MRL 48	8131-050-651-104M/MRL
C 19	1	339-13-10005	601	CAP, 100PF 10% 20V C CASE	EMR	339-13-10005
C 20	1	339-13-10005	601	CAP, 100PF 10% 20V C CASE	EMR	339-13-10005
C 21	1	301-13-10002		CAP,CR , 50V .100 UF 20%	MRL 48	8131-050-651-104M/MRL
THRU						
C 23						
C 24	1	707-02-14301	904	CAP., .0143MF 2% 50V	EMR	707-02-14301
C 25	1	304-CC-CCCCC	600	CAP.,*T/VAR*		
C 26	1	304-CC-CCCCC	600	CAP.,*T/VAR*		
C 27	1	305-CC-CCCCC	600	CAP.,*T/VAR*		
C 28	1	304-20-13509	600	CAP. 135PF 1% 500V	EMR	304-20-13509
C 29	1	304-CC-CCCCC	600	CAP.,*T/VAR*		
C 30	1	304-01-01609	600	CAP. 16PF .5PF 500V	EMR	304-01-01609
C 31	1	304-01-01609	600	CAP. 16PF .5PF 500V	EMR	304-01-01609
C 32	1	304-20-13509	600	CAP. 135PF 1% 500V	EMR	304-20-13509
C 33	1	304-CC-CCCCC	600	CAP.,*T/VAR*		
C 34	1	305-CC-CCCCC	600	CAP.,*T/VAR*		

FIRST USAGE MODEL 4142

ITEM NO.	QTY REQD	E M R NUMBER	DRAWING OR SPEC NO.	DESCRIPTION	VENDOR NAME	VENDOR PART NUMBER
C 35	1	304-CC-C0000	600	CAP.,*T/VAR*		
C 36	1	304-00-00000	600	CAP.,*T/VAR*		
C 37	1	707-02-14301	904	CAP.,.0143MF 2% 50V	EMR	707-02-14301
C 38	1	304-41-56009	600	CAP. 560PF 1% 300V	EMR	304-41-56009
C 39	1	304-08-04009	600	CAP. 40PF .5PF 500V	EMR	304-08-04009
C 40	1	305-20-50000	600	CAP. 5000PF 1% 500V	EMR	305-20-50000
C 41	1	304-20-36709	600	CAP. 367PF 1% 500V	EMR	304-20-36709
C 42	1	707-02-54001	904	CAP.,.054MF 2% 50V	EMR	707-02-54001
C 43	1	305-20-40600	600	CAP. 4060PF 1% 500V	EMR	305-20-40600
C 44	1	336-05-56002	601	CAP.,.56MF 5% 35V	EMR	336-05-56002
C 46	1	336-08-82001		CAP.,.082MF 5% 100V	SPEC	601
C 47	1	337-05-56003	601	CAP. 5.6MF 5% 35V	EMR	337-05-56003
C 49	1	336-05-33002	601	CAP. .33MF 5% 35V	EMR	336-05-33002
C 50	1	301-13-10003		CAP,CR , 50V 1.00UF 20%	MRL 48	8131-050-651-105M/MRL
C 52	1	304-13-06809	600	CAP. 68PF 1% 500V	EMR	304-13-06809
C 53	1	304-01-00109	600	CAP. 1PF .5PF 500V	EMR	304-01-00109
C 54	1	301-13-10002		CAP,CR , 50V .100 UF 20%	MRL 48	8131-050-651-104M/MRL
C 55	1	301-13-10002		CAP,CR , 50V .100 UF 20%	MRL 48	8131-050-651-104M/MRL
C 56	1	301-13-10003		CAP,CR , 50V 1.00UF 20%	MRL 48	8131-050-651-105M/MRL
C 57	1	304-13-06809	600	CAP. 68PF 1% 500V	EMR	304-13-06809
C 58	1	304-01-00109	600	CAP. 1PF .5PF 500V	EMR	304-01-00109
C 59	1	301-13-10002		CAP,CR , 50V .100 UF 20%	MRL 48	8131-050-651-104M/MRL
C 60	1	301-13-10002		CAP,CR , 50V .100 UF 20%	MRL 48	8131-050-651-104M/MRL
C 61	1	337-14-68003	601	CAP. 6.8MF 10% 35V	EMR	337-14-68003
C 62	1	301-11-10002		CAP,CR , 50V .100 UF 20%	MRL 48	8131-050-651-104M/MRL
CR 1 THRU CR 8	8	048-10-41480		DIODE,SW,75V/50UA,4NS/10MA	JEDEC	1N4148
CR 9	1	088-10-09420		DIO,REF,11.7V/7.5MA,.005%	JEDEC	1N942
CR 10 THRU CR 43	34	048-10-41480		DIODE,SW,75V/50UA,4NS/10MA	JEDEC	1N4148
K 1 THRU K 3	3	219-98-00045		RELAY,2A RMOD CONT,26V	MATHAWAY	65630-37/GP-2A-26P
K 4 THRU K 12	9	219-99-00027	28531-20	RELAY,1 FORM A,GOLD CONT	EMR	219-99-00027
K 13 THRU K 16	4	219-98-00045		RELAY,2A RMOD CONT,26V	MATHAWAY	65630-37/GP-2A-26P
K 17 THRU K 33	17	219-99-00027	28531-20	RELAY,1 FORM A,GOLD CONT	EMR	219-99-00027
K 34	1	219-99-00028	28531-21	RELAY,2 FORM A,GOLD CONT	EMR	219-99-00028
K 35	1	219-99-00019	28531-12	RELAY,2 FORM C,GOLD CONT	EMR	219-99-00019
Q 1	1	263-35-00039		XSTR,NP..MAT.PR,VBE1-VBE2	AMPEREX	A642/S
Q 3 THRU Q 12	10	263-10-39330		XSTR,NPN 30V VHF/UHF AMPL	JEDEC	2N3933

FIRST USAGE MODEL 4142

205-89-00710 17396 SHT 3 OF 5

ITEM NO.	QTY REQD	E M R NUMBER	DRAWING OR SPEC NO.	DESCRIPTION	VENDOR NAME	VENDOR PART NUMBER
Q 15	1	263-10-22221		XSTR,NPN 75V,DC/UHF AMPL	MML 4	2N2222A
R 1	1	616-02-01009		RES,10 OHM 5% 1/4W	ALLEN BRAD	RC07GF100J
R 2	1	616-02-82000		RES,8.2K 5% 1/4W	ALLEN BRAD	RC07GF822J
R 3	1	616-02-82000		RES,8.2K 5% 1/4W	ALLEN BRAD	RC07GF822J
R 4	1	616-02-10009		RES,100 OHM 5% 1/4W	ALLEN BRAD	RC07GF101J
R 5	1	616-02-56009		RES,560 OHM 5% 1/4W	ALLEN BRAD	RC07GF561J
R 6	1	201-98-00150		POT,TRMR, 10 OHM 20% .5W	BLCK/MML27	62PR10
R 7	1	616-02-56009		RES,560 OHM 5% 1/4W	ALLEN BRAD	RC07GF561J
R 8	1	616-02-30009		RES,3K 5% 1/4W	ALLEN BRAD	RC07GF302J
R 9	1	616-02-30009		RES,3K 5% 1/4W	ALLEN BRAD	RC07GF302J
R 11	1	616-02-01009		RES,10 OHM 5% 1/4W	ALLEN BRAD	RC07GF100J
R 12	1	616-02-47009		RES,4.7K 5% 1/4W	ALLEN BRAD	RC07GF472J
R 13	1	616-02-47009		RES,4.7K 5% 1/4W	ALLEN BRAD	RC07GF472J
R 14	1	616-02-10009		RES,100 OHM 5% 1/4W	ALLEN BRAD	RC07GF101J
R 15	1	616-02-10001		RES,10K 5% 1/4W	ALLEN BRAD	RC07GF103J
R 16	1	616-02-10009		RES,100 OHM 5% 1/4W	ALLEN BRAD	RC07GF101J
R 17	1	616-02-10001		RES,10K 5% 1/4W	ALLEN BRAD	RC07GF103J
R 18	1	616-02-18009		RES,1.8K 5% 1/4W	ALLEN BRAD	RC07GF182J
R 19	1	616-02-18009		RES,1.8K 5% 1/4W	ALLEN BRAD	RC07GF182J
R 20	1	616-02-01009		RES,10 OHM 5% 1/4W	ALLEN BRAD	RC07GF100J
R 21	1	616-02-12009		RES,120K 5% 1/4W	ALLEN BRAD	RC07GF124J
R 22	1	616-02-10009		RES,100 OHM 5% 1/4W	ALLEN BRAD	RC07GF101J
R 23	1	616-02-15009		RES,1.5K 5% 1/4W	ALLEN BRAD	RC07GF152J
R 24	1	616-02-10009		RES,100 OHM 5% 1/4W	ALLEN BRAD	RC07GF101J
R 25	1	616-02-10001		RES,10K 5% 1/4W	ALLEN BRAD	RC07GF103J
R 26	1	616-02-10009		RES,100 OHM 5% 1/4W	ALLEN BRAD	RC07GF101J
R 27	1	616-02-10001		RES,10K 5% 1/4W	ALLEN BRAD	RC07GF103J
R 28	1	616-02-91009		RES,910 OHM 5% 1/4W	ALLEN BRAD	RC07GF911J
R 29	1	616-02-91009		RES,910 OHM 5% 1/4W	ALLEN BRAD	RC07GF911J
R 30	1	616-02-01009		RES,10 OHM 5% 1/4W	ALLEN BRAD	RC07GF100J
R 31	1	616-02-62009		RES,620 OHM 5% 1/4W	ALLEN BRAD	RC07GF621J
R 32	1	616-02-62009		RES,620 OHM 5% 1/4W	ALLEN BRAD	RC07GF621J
R 33	1	616-02-10009		RES,100 OHM 5% 1/4W	ALLEN BRAD	RC07GF101J
R 34	1	616-02-43009		RES, 430 OHM 5% 1/4W	ALLEN BRAD	RC07GF431J
R 35	1	616-02-10009		RES,100 OHM 5% 1/4W	ALLEN BRAD	RC07GF101J
R 36	1	616-02-91009		RES,910 OHM 5% 1/4W	ALLEN BRAD	RC07GF911J
R 37	1	616-02-91009		RES,910 OHM 5% 1/4W	ALLEN BRAD	RC07GF911J
R 38	1	616-02-01009		RES,10 OHM 5% 1/4W	ALLEN BRAD	RC07GF100J
R 39	1	616-02-01009		RES,10 OHM 5% 1/4W	ALLEN BRAD	RC07GF100J
R 40	1	616-02-10009		RES,100 OHM 5% 1/4W	ALLEN BRAD	RC07GF101J
R 41	1	608-09-90909	624	RES, 909.0 OHM 1% 1/10W	EMR	608-09-90909
R 42	1	616-02-56009		RES,560 OHM 5% 1/4W	ALLEN BRAD	RC07GF561J
R 43	1	616-02-10009		RES,100 OHM 5% 1/4W	ALLEN BRAD	RC07GF101J
R 44	1	608-09-00000	624	RES,*T/*AM*		
R 45	1	616-02-10009		RES,100 OHM 5% 1/4W	ALLEN BRAD	RC07GF101J
R 46	1	608-09-00000	624	RES,*T/*AM*		
R 47	1	616-02-56009		RES,560 OHM 5% 1/4W	ALLEN BRAD	RC07GF561J
R 48	1	616-02-10009		RES,100 OHM 5% 1/4W	ALLEN BRAD	RC07GF101J
R 49	1	608-09-90909	624	RES, 909.0 OHM 1% 1/10W	EMR	608-09-90909

FIRST USAGE MODEL 4142

ITEM NO.	QTY REQD	E M R NUMBER	DRAWING OR SPEC NO.	DESCRIPTION	VENDOR NAME	VENDOR PART NUMBER
R 50	1	608-09-00000	624	RES,*T/VAR*		
R 51	1	608-09-00000	624	RES,*T/VAR*		
R 52	1	608-09-10000	624	RES. 1K 1% 1/10W	EMR	608-09-10000
R 53	1	616-02-15009		RES,150 OHM 5% 1/4W	ALLEN BRAD	RC07GF151J
R 54	1	608-09-10000	624	RES. 1K 1% 1/10W	EMR	608-09-10000
R 55	1	608-09-00000	624	RES,*T/VAR*		
R 56	1	608-09-75009	624	RES, 750.0 OHM 1% 1/10W	EMR	608-09-75009
R 57	1	608-09-75009	624	RES, 750.0 OHM 1% 1/10W	EMR	608-09-75009
R 60	1	616-02-19009		RES,190 OHM 5% 1/4W	ALLEN BRAD	RC07GF191J
R 61	1	616-02-47009		RES,470 OHM 5% 1/4W	ALLEN BRAD	RC07GF471J
R 62	1	608-09-24900	624	RES, 2.49K 1% 1/10W	EMR	608-09-24900
R 63	1	608-09-49900	624	RES. 4.99K 1% 1/10W	EMR	608-09-49900
R 64	1	608-09-10001	624	RES. 10K 1% 1/10W	EMR	608-09-10001
R 65	1	608-09-20001	624	RES. 20K 1% 1/10W	EMR	608-09-20001
R 66	1	608-09-24909	624	RES, 249.0 OHM 1% 1/10W	EMR	608-09-24909
R 67	1	608-09-49909	624	RES, 499.0 OHM 1% 1/10W	EMR	608-09-49909
R 68	1	608-09-10000	624	RES. 1K 1% 1/10W	EMR	608-09-10000
R 69	1	608-09-20000	624	RES. 2.0K 1% 1/10W	EMR	608-09-20000
R 70	1	608-09-11802	624	RES, 118.0K 1% 1/10W	EMR	608-09-11802
R 71	1	201-98-00063		POT,TRMR, 20 K 10% .5W	BECK/MMLZT	62PR20K
R 72	1	608-09-11802	624	RES, 118.0K 1% 1/10W	EMR	608-09-11802
R 73	1	616-02-20009		RES,200 OHM 5% 1/4W	ALLEN BRAD	RC07GF201J
R 74	1	608-09-10002	624	RES, 100.0K 1% 1/10W	EMR	608-09-10002
R 75	1	608-09-20002	624	RES, 200.0K 1% 1/10W	EMR	608-09-20002
R 76	1	608-09-40202	624	RES, 402.0K 1% 1/10W	EMR	608-09-40202
R 77	1	608-01-80602	624	RES, 806K 1% 1/10W 100 PP	EMR	608-01-80602
R 78	1	616-02-00000		RES,*T/VAR* 5% 1/4W		
R 79	1	608-09-10201	624	RES, 10.2K 1% 1/10W	EMR	608-09-10201
R 80	1	616-02-00000		RES,*T/VAR* 5% 1/4W		
R 81	1	608-09-20501	624	RES. 20.5K 1% 1/10W	EMR	608-09-20501
R 82	1	616-02-00000		RES,*T/VAR* 5% 1/4W		
R 83	1	608-09-41201	624	RES, 41.2K 1% 1/10W	EMR	608-09-41201
R 84	1	616-02-00000		RES,*T/VAR* 5% 1/4W		
R 85	1	608-09-80601	624	RES, 80.6K 1% 1/10W	EMR	608-09-80601
R 86	1	608-09-00000	624	RES,*T/VAR* 1% 1/10W		
R 87	1	608-09-10200	624	RES, 1.02K 1% 1/10W	EMR	608-09-10200
R 88	1	608-09-00000	624	RES,*T/VAR* 1% 1/10W		
R 89	1	608-09-20500	624	RES. 2.05K 1% 1/10W	EMR	608-09-20500
R 90	1	608-09-00000	624	RES,*T/VAR* 1% 1/10W		
R 91	1	608-09-41200	624	RES, 4.12K 1% 1/10W	EMR	608-09-41200
R 92	1	608-09-00000	624	RES,*T/VAR* 1% 1/10W		
R 93	1	608-09-80600	624	RES, 8.06K 1% 1/10W	EMR	608-09-80600
R 94	1	608-09-00000	624	RES,*T/VAR* 1% 1/10W		
R 95	1	608-09-90609	624	RES, 906.0 OHM 1% 1/10W	EMR	608-09-90609
R 96	1	201-98-00063		POT,TRMR, 20 K 10% .5W	BECK/MMLZT	62PR20K
R 98	1	616-02-01009		RES,10 OHM 5% 1/4W	ALLEN BRAD	RC07GF100J
R 99	1	616-02-01009		RES,10 OHM 5% 1/4W	ALLEN BRAD	RC07GF100J
R 100	1	608-09-00000	624	RES, *T/VAR* 1% 1/10W		
R 101	1	608-09-00000	624	RES. *T/VAR* 1% 1/10W		

FIRST USAGE MODEL 4142

205-09-00710 17396 SHT 5 OF 5

ITEM NO.	QTY REQD	E M R NUMBER	DRAWING OR SPEC NO.	DESCRIPTION	VENDOR NAME	VENDOR PART NUMBER
R 102	1	616-02-20009		RES,200 OHM 5% 1/4W	ALLEN BRAD	RC07GF201J
R 103	1	608-09-23700	624	RES., 2.37K 1% 1/10W	EMR	608-09-23700
R 104	1	608-09-34800	624	RES, 3.48K 1% 1/10W	EMR	608-09-34800
R 105	1	609-09-63400	624	RES, 6.34K 1% 1/10W	EMR	608-09-63400
R 106	1	608-09-10501	624	RES, 10.5K 1% 1/10W	EMR	608-09-10501
R 107	1	609-09-10501	624	RES, 10.5K 1% 1/10W	EMR	608-09-10501
R 109	1	616-02-01009		RES,10 OHM 5% 1/4W	ALLEN BRAD	RC07GF100J
R 110	1	616-02-01009		RES,10 OHM 5% 1/4W	ALLEN BRAD	RC07GF100J
R 111	1	616-02-05609		RES,56 OHM 5% 1/4W	ALLEN BRAD	RC07GF560J
R 112	1	609-09-00000	624	RES,0T/VAR0 1% 1/10W		
R 113	1	616-02-00000		RES,0T/VAR0 5% 1/4W		
R 114	1	616-02-00000		RES,0T/VAR0 5% 1/4W		
R 115	1	608-09-64901	624	RES, 64.9K 1% 1/10W	EMR	608-09-64901
R 116	1	608-09-00000	624	RES, 0T/VAR0		
U 1	1	046-97-00203		IC,LIN AMPL,OPNL HS SLEW	HARRIS/HML40	HA2-2525-5
U 2	1	046-97-00203		IC,LIN AMPL,OPNL HS SLEW	HARRIS/HML40	HA2-2525-5
REF 1	1	905-01-00539	17396	SCHEMATIC,PWA	EMR	905-01-00539
REF 2	1	905-04-00002	9500-1	SPEC,COMPONENT SPACING	EMR	905-04-00002

FIRST USAGE MODEL 4147

(Rev. F)

EMR - TELEMETRY

PARTS LIST 17396-1 REV DATE 04/16/76 REV LTR V

LIST TITLE PWA,LMTR,DET,SINGLE POLE CNGE CONT NO. CCUE IDENT SHT 1 OF 5
PART NO. 205-89-C0718 ECO RECORD $ 06141 CKD BY

ITEM NO.	QTY REQD	EMR NUMBER	DRAWING OR SPEC NO.	DESCRIPTION	VENDOR NAME	VENDOR PART NUMBER
1	1	204-89-00279	17395	PWA,LMTR, DET SINGLE POLE	EMR	204-89-00279
2	13	189-98-00004		PAD,XSTR 4 PINOUSE OPTL*	DEL BLINN	ICO-000-NY
3	2	239-99-00008	6477-7	EJCTR,CARD,.062BD,PCS&R	EMR	259-99-00008
4	2	189-99-00016		PAD,XSTR,TO-5 8PIN,.075H	MILTON ROSS	10269-N
5	2	229-02-00065		SCREW,2-56X1/4 PAN HD	PRCMT OPTION	MS51957-3
6	2	273-02-00003		WASHER,#2, FLT ST STL	PRCMT OPTION	MS15795-802
7	2	273-02-00074		WASHER,#2,INT TCTH	PRCMT OPTION	MS35333-69
13	AR	276-99-00008	619-22	WIRE,#22,NUSS,SOL D	EMR	276-99-00008
14	AR	268-02-00039		TUBING,#22,EXTR TEF,CLEAR	PRCMT OPTION	MIL-I-22129
15	1	205-89-01014	21777	PWA, DETECTOR SWITCHES	EMR	2C5-89-C1014
16	1	140-99-00136	21968	INS,.25X.75 .062THK G10	EMR	140-99-00136
17	AR	060-12-00004		CMPD,SEALANT,GENL PURPOSE	G.E.	RTV-102
C 1	1	337-12-22004	601	CAP,, 22MF 10% 15V	EMR	337-12-22004
C 2	1	337-12-22004	601	CAP,, 22MF 10% 15V	EMR	337-12-22004
C 3 THRU C 6	4	301-13-10002		CAP,CR , 50V .100 UF 20%	MML 48	8131-050-651-104M/MML
C 7	1	301-23-27003		CAP,CR , 50V 2.7 UF 20%	MML 48	8141-050-651-275M/MML
C 8	1	301-23-27003		CAP,CR , 50V 2.7 UF 20%	MML 48	8141-050-651-275M/MML
C 9	1	301-13-10002		CAP,CR , 50V .100 UF 20%	MML 48	8131-050-651-104M/MML
C 10	1	301-13-10002		CAP,CR , 50V .100 UF 20%	MML 48	8131-050-651-104M/MML
C 11	1	301-23-27003		CAP,CR , 50V 2.7 UF 20%	MML 48	8141-050-651-275M/MML
C 12	1	301-23-27003		CAP,CR , 50V 2.7 UF 20%	MML 48	8141-050-651-275M/MML
C 13	1	301-13-10003		CAP,CR , 50V 1.00UF 20%	MML 48	8131-050-651-105M/MML
C 14	1	301-13-10002		CAP,CR , 50V .100 UF 20%	MML 48	8131-050-651-104M/MML
C 15	1	301-13-10002		CAP,CR , 50V .100 UF 20%	MML 48	8131-050-651-104M/MML
C 16	1	337-12-22004	601	CAP,, 22MF 10% 15V	EMR	337-12-22004
C 17	1	301-13-10002		CAP,CR , 50V .100 UF 20%	MML 48	8131-050-651-104M/MML
C 18	1	301-13-10002		CAP,CR , 50V .100 UF 20%	MML 48	8131-050-651-104M/MML
C 19	1	339-13-10005	601	CAP, 100PF 10% 20V C CASE	EMR	339-13-10005
C 20	1	339-13-10005	601	CAP, 100PF 10% 20V C CASE	EMR	339-13-10005
C 21 THRU C 23	3	301-13-10002		CAP,CR , 50V .100 UF 20%	MML 48	8131-050-651-104M/MML
C 24	1	307-02-14301	906	CAP,, .0143MF 2% 50V	EMR	307-02-14301
C 25	1	3C4-CC-C0000	600	CAP,,*T/VAR*		
C 26	1	3C4-CC-C0000	600	CAP,,*T/VAR*		
C 27	1	3C5-C0-C0000	600	CAP,,*T/VAR*		
C 28	1	304-2C-13503	600	CAP, 135PF 1% 500V	EMR	3C4-20-13509
C 29	1	3C4-00-00000	600	CAP,,*T/VAR*		
C 30	1	3C4-01-01604	600	CAP, 16PF .5PF 500V	EMR	3C4-01-01604
C 31	1	3C4-01-01603	600	CAP, 16PF .5PF 500V	EMR	3C4-01-01603
C 32	1	3C4-2C-13509	600	CAP, 135PF 1% 500V	EMR	3C4-20-13509
C 33	1	304-C0-C0000	600	CAP,,*T/VAR*		
C 34	1	305-C0-C0000	600	CAP,,*T/VAR*		

FIRST USAGE MODEL 4142

ITEM NO.	QTY REQD	E M R NUMBER	DRAWING OR SPEC NO.	DESCRIPTION	VENDOR NAME	VENDOR PART NUMBER
C 35	1	304-00-00000	600	CAP.,*T/VAR*		
C 36	1	304-CC-00000	600	CAP.,*T/VAR*		
C 37	1	707-02-14301	904	CAP., .0143MF 2% 50V	EMR	707-02-14301
C 38	1	304-41-53009	600	CAP. 530PF 1% 300V	EMR	304-41-53009
C 39	1	304-20-11509	600	CAP. 1150PF 1% 500V	EMR	304-20-11509
C 40	1	305-20-48C00	600	CAP. 4800PF 1% 500V	EMR	305-20-48000
C 41	1	305-20-10800	600	CAP. 10800PF 1% 500V	EMR	305-20-10800
C 42	1	707-02-53001	904	CAP., .0531MF 2% 50V	EMR	707-02-53001
C 43	1	707-02-11801	904	CAP.,.0118MF,2% 50V	EMR	707-02-11801
C 44	1	336-05-47002	601	CAP. .47MF 5% 35V	EMR	336-05-47002
C 45	1	336-08-56001		CAP., .056MF 5% 100V	SPEC	601
C 46	1	336-07-12002		CAP., .12MF 5% 75V	SPEC	601
C 47	1	337-05-47003	601	CAP. 4.7MF 5% 15V	EMR	337-05-47003
C 48	1	336-05-56002	601	CAP., .56MF 5% 35V	EMR	336-05-56002
C 49	1	336-04-12003	601	CAP. 1.2MF 5% 20V	EMR	336-04-12003
C 50	1	301-13-10003		CAP,CR , 50V 1.00UF 20%	MML 48	8131-050-651-105M/MML
C 52	1	304-11-06809	600	CAP. 68PF 1% 500V	EMR	304-11-06809
C 53	1	304-01-00309	600	CAP. 3PF .5PF 500V	EMR	304-01-00309
C 54	1	301-13-10002		CAP,CR , 50V .100 UF 20%	MML 48	8131-050-651-104M/MML
C 55	1	301-13-10002		CAP,CR , 50V .100 UF 20%	MML 48	8131-050-651-104M/MML
C 56	1	301-13-10003		CAP,CR , 50V 1.00UF 20%	MML 48	8131-050-651-105M/MML
C 57	1	304-13-06809	600	CAP. 68PF 1% 500V	EMR	304-13-06809
C 58	1	304-01-00309	600	CAP. 3PF .5PF 500V	EMR	304-01-00309
C 59	1	301-13-10002		CAP,CR , 50V .100 UF 20%	MML 48	8131-050-651-104M/MML
C 60	1	301-13-10002		CAP,CR , 50V .100 UF 20%	MML 48	8131-050-651-104M/MML
C 61	1	337-14-68003	601	CAP. 6.8MF 10% 35V	EMR	337-14-68003
C 62	1	301-13-10002		CAP,CR , 50V .100 UF 20%	MML 48	8131-050-651-104M/MML
CR 1 THRU CR 8	8	088-10-41480		DIODE,SW,75V/50UA,4NS/10MA	JEDEC	1N4148
CR 9	1	088-10-09420		DIO,REF,11.7V/7.5MA,.005%	JEDEC	1N962
CR 10 THRU CR 43	34	088-10-41480		DIODE,SW,75V/50UA,4NS/10MA	JEDEC	1N4148
K 1 THRU K 3	3	219-98-C0045		RELAY,2A RHOD CONT,26V	HATHAWAY	65630-37/GP-2A-26P
K 4 THRU K 12	9	219-99-00027	28531-20	RELAY,1 FORM A,GOLD CONT	EMR	219-99-00027
K 13 THRU K 16	4	219-98-00045		RELAY,2A RHOD CONT,26V	HATHAWAY	65630-37/GP-2A-26P
K 17 THRU K 33	17	219-99-00027	28531-20	RELAY,1 FORM A,GOLD CONT	EMR	219-99-00027
K 34	1	219-99-00028	28531-21	RELAY,2 FORM A,GOLD CONT	EMR	219-99-00028
K 45	1	219-99-00019	28531-12	RELAY,2 FORM C,GOLD CONT	EMR	219-99-00019
Q 1	1	263-35-C0039		XSTR,NPN,MAT.PR,VBE1-VBE2	AMPEREX	A642/5

FIRST USAGE MODEL 4147

ITEM NO.	QTY REQD	E M R NUMBER	DRAWING OR SPEC NO.	DESCRIPTION	VENDOR NAME	VENDOR PART NUMBER
Q 3 THRU Q 12	10	263-10-39330		XSTR,NPN 30V VHF/UHF AMPL	JEDEC	2N3933
C 15	1	263-10-22221		XSTR,NPN 75V,DC/UHF APPL	MML 4	2N2222A
R 1	1	616-02-C1009		RES,10 OHM 5% 1/4W	ALLEN BRAD	RC07GF100J
R 2	1	616-02-82C00		RES,8.2K 5% 1/4W	ALLEN BRAD	RC07GF822J
R 3	1	616-02-82000		RES,8.2K 5% 1/4W	ALLEN BRAD	RC07GF822J
R 4	1	616-02-10009		RES,100 OHM 5% 1/4W	ALLEN BRAD	RC07GF101J
R 5	1	616-02-56009		RES,560 OHM 5% 1/4W	ALLEN BRAD	RC07GF561J
R 6	1	201-98-00150		POT,TRPH, 10 OHM 20% .5W	BECK/MML27	62PR10
R 7	1	616-02-56009		RES,560 OHM 5% 1/4W	ALLEN BRAD	RC07GF561J
R 8	1	616-02-30000		RES,3K 5% 1/4W	ALLEN BRAD	RC07GF302J
R 9	1	616-02-30000		RES,3K 5% 1/4W	ALLEN BRAD	RC07GF302J
R 11	1	616-02-01009		RES,10 OHM 5% 1/4W	ALLEN BRAD	RC07GF100J
R 12	1	616-02-47000		RES,4.7K 5% 1/4W	ALLEN BRAD	RC07GF472J
R 13	1	616-02-47000		RES,4.7K 5% 1/4W	ALLEN BRAD	RC07GF472J
R 14	1	616-02-10009		RES,100 OHM 5% 1/4W	ALLEN BRAD	RC07GF101J
R 15	1	616-02-10001		RES,10K 5% 1/4W	ALLEN BRAD	RC07GF103J
R 16	1	616-02-10009		RES,100 OHM 5% 1/4W	ALLEN BRAD	RC07GF101J
R 17	1	616-02-10001		RES,10K 5% 1/4W	ALLEN BRAD	RC07GF103J
R 18	1	616-02-18000		RES,1.8K 5% 1/4W	ALLEN BRAD	RC07GF182J
R 19	1	616-02-18000		RES,1.8K 5% 1/4W	ALLEN BRAD	RC07GF182J
R 20	1	616-02-01C09		RES,10 OHM 5% 1/4W	ALLEN BRAD	RC07GF100J
R 21	1	616-02-12002		RES,120K 5% 1/4W	ALLEN BRAD	RC07GF124J
R 22	1	616-02-10009		RES,100 OHM 5% 1/4W	ALLEN BRAD	RC07GF101J
R 23	1	616-02-15C00		RES,1.5K 5% 1/4W	ALLEN BRAD	RC07GF152J
R 24	1	616-02-10009		RES,100 OHM 5% 1/4W	ALLEN BRAD	RC07GF101J
R 25	1	616-02-10001		RES,10K 5% 1/4W	ALLEN BRAD	RC07GF103J
R 26	1	616-02-10009		RES,100 OHM 5% 1/4W	ALLEN BRAD	RC07GF101J
R 27	1	616-02-10001		RES,10K 5% 1/4W	ALLEN BRAD	RC07GF103J
R 28	1	616-02-91009		RES,910 OHM 5% 1/4W	ALLEN BRAD	RC07GF911J
R 29	1	616-02-91009		RES,910 OHM 5% 1/4W	ALLEN BRAD	RC07GF911J
R 30	1	616-02-01009		RES,10 OHM 5% 1/4W	ALLEN BRAD	RC07GF100J
R 31	1	616-02-62009		RES,620 OHM 5% 1/4W	ALLEN BRAD	RC07GF621J
R 32	1	616-02-62009		RES,620 OHM 5% 1/4W	ALLEN BRAD	RC07GF621J
R 33	1	616-02-10009		RES,100 OHM 5% 1/4W	ALLEN BRAD	RC07GF101J
R 34	1	616-02-43001		RES, 430 OHM 5% 1/4W	ALLEN BRAD	RC07GF431J
R 35	1	616-02-10009		RES,100 OHM 5% 1/4W	ALLEN BRAD	RC07GF101J
R 36	1	616-02-91009		RES,910 OHM 5% 1/4W	ALLEN BRAD	RC07GF911J
R 37	1	616-02-91009		RES,910 OHM 5% 1/4W	ALLEN BRAD	RC07GF911J
R 38	1	616-02-C1009		RES,10 OHM 5% 1/4W	ALLEN BRAD	RC07GF100J
R 39	1	616-02-C1009		RES,10 OHM 5% 1/4W	ALLEN BRAD	RC07GF100J
R 40	1	616-02-10009		RES,100 OHM 5% 1/4W	ALLEN BRAD	RC07GF101J
R 41	1	608-09-90909	624	RES, 909.0 OHM 1% 1/10W	EMR	608-09-90909
R 42	1	616-02-56009		RES,560 OHM 5% 1/4W	ALLEN BRAD	RC07GF561J
R 43	1	616-02-10009		RES,100 OHM 5% 1/4W	ALLEN BRAD	RC07GF101J
R 44	1	608-09-00000	624	RES,*I/VAR* 1% 1/10W		
R 45	1	616-02-10009		RES,100 OHM 5% 1/4W	ALLEN BRAD	RC07GF101J
R 46	1	608-09-00000	624	RES,*I/VAR* 1% 1/10W		

FIRST USAGE MODEL 4142

ITEM NO.	QTY REQD	E M R NUMBER	DRAWING OR SPEC NO.	DESCRIPTION	VENDOR NAME	VENDOR PART NUMBER
R 47	1	616-02-56009		RES,560 OHM 5% 1/4W	ALLEN BRAD	RC07GF561J
R 48	1	616-02-10009		RES,100 OHM 5% 1/4W	ALLEN BRAD	RC07GF101J
R 49	1	608-09-90909	624	RES, 909.0 OHM 1% 1/10W	EMR	608-09-90909
R 50	1	608-09-00000	624	RES,*T/VAR*		
R 51	1	608-09-00000	624	RES,*T/VAR*		
R 52	1	608-09-10000	624	RES. 1K 1% 1/10W	EMR	608-09-10000
R 53	1	616-02-15009		RES,150 OHM 5% 1/4W	ALLEN BRAD	RC07GF151J
R 54	1	608-09-10000	624	RES. 1K 1% 1/10W	EMR	608-09-10000
R 55	1	608-09-00000	624	RES,*T/VAR*		
R 56	1	608-09-75009	624	RES, 750.0 OHM 1% 1/10W	EMR	608-09-75009
R 57	1	608-09-75009	624	RES, 750.0 OHM 1% 1/10W	EMR	608-09-75009
R 60	1	616-02-39009		RES,390 OHM 5% 1/4W	ALLEN BRAD	RC07GF391J
R 61	1	616-02-47009		RES,470 OHM 5% 1/4W	ALLEN BRAD	RC07GF471J
R 62	1	608-09-24900	624	RES. 2.49K 1% 1/10W	EMR	608-09-24900
R 63	1	608-09-49900	624	RES. 4.99K 1% 1/10W	EMR	608-09-49900
R 64	1	608-09-10001	624	RES. 10K 1% 1/10W	EMR	608-09-10001
R 65	1	608-09-20001	624	RES. 20K 1% 1/10W	EMR	608-09-20001
R 66	1	608-09-24909	624	RES, 249.0 OHM 1% 1/10W	EMR	608-09-24909
R 67	1	608-09-49909	624	RES, 499.0 OHM 1% 1/10W	EMR	608-09-49909
R 68	1	608-09-10000	624	RES. 1K 1% 1/10W	EMR	608-09-10000
R 69	1	608-09-20000	624	RES. 2.0K 1% 1/10W	EMR	608-09-20000
R 70	1	608-09-11802	624	RES, 11K8.0K 1% 1/10W	EMR	608-09-11802
R 71	1	201-98-00063		POT,TRMR, 20 K 10% .5W	BECK/MML27	62PR20K
R 72	1	608-09-11802	624	RES, 11K8.0K 1% 1/10W	EMR	608-09-11802
R 73	1	616-02-20009		RES,200 OHM 5% 1/4W	ALLEN BRAD	RC07GF201J
R 74	1	608-09-10002	624	RES, 100.0K 1% 1/10W	EMR	608-09-10002
R 75	1	608-09-20002	624	RES, 200.0K 1% 1/10W	EMR	608-09-20002
R 76	1	608-09-40202	624	RES, 402.0K 1% 1/10W	EMR	608-09-40202
R 77	1	608-01-80602	624	RES, 806K 1% 1/10W 100 PP	EMR	608-01-80602
R 78	1	616-02-00000		RES,*T/VAR* 5% 1/4W		
R 79	1	608-09-10201	624	RES, 10.2K 1% 1/10W	EMR	608-09-10201
R 80	1	616-02-00000		RES,*T/VAR* 5% 1/4W		
R 81	1	608-09-20501	624	RES, 20.5K 1% 1/10W	EMR	608-09-20501
R 82	1	616-02-00000		RES,*T/VAR* 5% 1/4W		
R 83	1	608-09-41201	624	RES, 41.2K 1% 1/10W	EMR	608-09-41201
R 84	1	616-02-00000		RES,*T/VAR* 5% 1/4W		
R 85	1	608-09-80601	624	RES, 80.6K 1% 1/10W	EMR	608-09-80601
R 86	1	608-09-00000	624	RES,*T/VAR* 1% 1/10W		
R 87	1	608-09-10200	624	RES, 1.02K 1% 1/10W	EMR	608-09-10200
R 88	1	608-09-00000	624	RES,*T/VAR* 1% 1/10W		
R 89	1	608-09-20500	624	RES, 2.05K 1% 1/10W	EMR	608-09-20500
R 90	1	608-09-00000	624	RES,*T/VAR* 1% 1/10W		
R 91	1	608-09-41200	624	RES, 4.12K 1% 1/10W	EMR	608-09-41200
R 92	1	608-09-00000	624	RES,*T/VAR* 1% 1/10W		
R 93	1	608-09-80600	624	RES, 8.06K 1% 1/10W	EMR	608-09-80600
R 94	1	608-09-00000		RES,*T/VAR* 1% 1/10W		
R 95	1	608-09-80609	624	RES, 806.0 OHM 1% 1/10W	EMR	608-09-80609
R 96	1	201-98-00063		POT,TRMR, 20 K 10% .5W	BECK/MML27	62PR20K
R 98	1	616-02-01009		RES,10 OHM 5% 1/4W	ALLEN BRAD	RC07GF100J

FIRST USAGE MODEL 4142

ITEM NO.	QTY REQD	E M R NUMBER	DRAWING OR SPEC NO.	DESCRIPTION	VENDOR NAME	VENDOR PART NUMBER
R 99	1	616-02-01009		RES,10 OHM 5% 1/4W	ALLEN BRAD	RC07GF100J
R 100	1	608-09-C0C00	624	RES, 9T/VAR* 1% 1/10W		
R 101	1	608-09-0C000	624	RES, 9T/VAR* 1% 1/10W		
R 102	1	616-02-20009		RES,200 OHM 5% 1/4W	ALLEN BRAD	RC07GF201J
R 103	1	605-09-23700	624	RES,, 2.37K 1% 1/10W	EMR	608-09-23700
R 104	1	608-C9-34800	624	RES, 3.48K 1% 1/10W	EMR	608-C9-34800
R 105	1	608-09-63400	624	RES, 6.34K 1% 1/10W	EMR	608-09-63400
R 106	1	608-09-10501	624	RES, 10.5K 1% 1/10W	EMR	608-09-10501
R 107	1	608-C9-10501	624	RES, 10.5K 1% 1/10W	EMR	608-C9-10501
R 109	1	616-02-01009		RES,10 OHM 5% 1/4W	ALLEN BRAD	RC07GF100J
R 110	1	616-02-01009		RES,10 OHM 5% 1/4W	ALLEN BRAD	RC07GF100J
R 111	1	616-C2-05609		RES,56 OHM 5% 1/4W	ALLEN BRAD	RC07GF560J
R 112	1	608-C9-CCC00	624	RES,9T/VAR* 1% 1/10W		
K 113	1	616-02-00000		RES,9T/VAR* 5% 1/4W		
K 114	1	616-02-C0000		RES,9T/VAR* 5% 1/4W		
K 115	1	605-C9-64901	624	RES, 64.9K 1% 1/10W	EMR	608-09-64901
R 116	1	608-09-00000	624	RES, 9T/VAR*		
U 1	1	046-97-C0209		IC,LIN AMPL,OPNL HS SLEW	HARRIS/HPL40	HA2-2525-5
U 2	1	046-97-C0203		IC,LIN APPL,OPNL HS SLEW	HARRIS/HPL40	HA2-2525-5
REF 1	1	905-01-90539	17394	SCHEMATIC,PWA	EMR	905-01-00539
REF 2	1	905-04-00002	9500-1	SPEC,COMPONENT SPACING	EMR	905-04-00002

FIRST USAGE MODEL 4142

A8

EMR - TELEMETRY

PARTS LIST 17396-2 REV DATE 04/16/86 REV LTR Z

LIST TITLE PWA,LMTR,DET,SINGLE POLE CHGE CONT NO. CODE IDENT SHT 1 OF 5
PART NO. 205-89-C0719 ECO RECORD S 06141 CAD BY

ITEM NO.	QTY REQD	EMR NUMBER	DRAWING OR SPEC NO.	DESCRIPTION	VENDOR NAME	VENDOR PART NUMBER
1	1	204-87-00279	17395	PWB,LMTR, DET SINGLE POLE	EMR	204-89-00279
2	13	189-98-00004		PAD,XSTR 4 PINOUSE OPTL*	DEL GLINN	ICO-000-MY
3	2	249-99-C000R	6477-7	EJCTR,CARD,.0628D,PCSNR	EMR	259-59-00008
4	2	189-98-00016		PAD,XSTR,TO-5 APIN,.075H	MILTON ROSS	10249-N
5	2	224-02-00065		SCREW,2-56X1/4 PAN HD	PRCMT OPTION	MS51957-3
6	2	273-02-C0003		WASHER,#2, FLT ST STL	PRCMT OPTION	MS15795-802
7	2	273-02-C0024		WASHER,#2,INT TCOTH	PRCMT OPTION	MS35333-69
13	AR	276-99-00009	619-22	WIRE,#22,NOSS,SOLID	EMR	276-99-00008
14	AR	268-02-00039		TUBING,#22,EXTN TEF,CLEAR	PRCMT OPTION	MIL-I-22129
15	1	205-89-C1014	21777	PWA, DETECTION SWITCHES	EMR	205-89-C1014
16	1	140-99-00136	21968	INS,.25X.75 .062THK G10	EMR	140-99-00136
17	AR	060-12-C0004		CMPD,SEALANT,GENL PURPOSE	G.E.	RTV-102
C 1	1	337-12-22004	601	CAP., 22MF 10% 15V	EMR	337-12-22004
C 2	1	337-12-22004	601	CAP., 22MF 10% 15V	EMR	337-12-22004
C 3 THRU	4	301-13-10002		CAP,CR , 50V .100 UF 20%	MPL 48	R131-050-651-104M/MMR
C 6						
C 7	1	301-23-27003		CAP,CR , 50V 2.7 UF 20%	MPL 48	R141-050-651-275M/MMR
C 8	1	301-23-27003		CAP,CR , 50V 2.7 UF 20%	MPL 48	R141-050-651-275M/MMR
C 9	1	301-13-10002		CAP,CR , 50V .100 UF 20%	MPL 48	R131-050-651-104M/MMR
C 10	1	301-13-10002		CAP,CR , 50V .100 UF 20%	MPL 48	R131-050-651-104M/MMR
C 11	1	301-23-27003		CAP,CR , 50V 2.7 UF 20%	MPL 48	R141-050-651-275M/MMR
C 12	1	301-23-27003		CAP,CR , 50V 2.7 UF 20%	MPL 48	R141-050-651-275M/MMR
C 13	1	301-13-10003		CAP,CR , 50V 1.00UF 20%	MPL 48	R131-050-651-105M/MMR
C 14	1	301-13-10002		CAP,CR , 50V .100 UF 20%	MPL 48	R131-050-651-104M/MMR
C 15	1	301-13-10002		CAP,CR , 50V .100 UF 20%	MPL 48	R131-050-651-104M/MMR
C 16	1	337-12-22004	601	CAP., 22MF 10% 15V	EMR	337-12-22004
C 17	1	301-13-10002		CAP,CR , 50V .100 UF 20%	MPL 48	R131-050-651-104M/MMR
C 18	1	301-13-10002		CAP,CR , 50V .100 UF 20%	MPL 48	R131-050-651-104M/MMR
C 19	1	339-13-10005	601	CAP, 100MF 10% 20V D CASE	EMR	339-13-10005
C 20	1	339-13-10005	601	CAP, 100MF 10% 20V D CASE	EMR	339-13-10005
C 21 THRU	3	301-13-10002		CAP,CR , 50V .100 UF 20%	MPL 48	R131-050-651-104M/MMR
C 23						
C 24	1	707-02-14301	904	CAP., .0143MF 2% 50V	EMR	707-02-14301
C 25	1	3C4-C0-C0000	600	CAP.,*T/VAR*		
C 26	1	3C4-CC-C0000	600	CAP.,*T/VAR*		
C 27	1	305-C0-C0009	600	CAP.,*T/VAR*		
C 28	1	3C4-2C-13509	600	CAP. 135PF 1% 500V	EMR	3C4-20-13509
C 29	1	3C4-C0-C0000	600	CAP.,*T/VAR*		
C 30	1	3C4-01-01609	600	CAP. 16PF .5PF 500V	EMR	304-01-01604
C 31	1	3C4-C1-01609	600	CAP. 16PF .5PF 500V	EMR	3C4-C1-01609
C 32	1	3C4-2C-13509	600	CAP. 135PF 1% 500V	EMR	304-20-13509
C 33	1	304-00-C0000	600	CAP.,*T/VAR*		
C 34	1	305-CC-C0000	600	CAP.,*T/VAR*		

FIRST USAGE MODEL 4147

(Rev. F)

ITEM NO.	QTY REQD	E M R NUMBER	DRAWING OR SPEC NO.	DESCRIPTION	VENDOR NAME	VENDOR PART NUMBER
C 35	1	304-00-C0000	600	CAP.,*T/VAR*		
C 36	1	304-CC-CC000	600	CAP.,*T/VAR*		
C 37	1	707-02-14301	904	CAP.,.0143PF 2% 50V	EMR	707-02-14301
C 38	1	304-20-47009	600	CAP. 470PF 1% 500V	EMR	304-20-47009
C 39	1	304-2C-21009	600	CAP. 210PF 1% 500V	EMR	3C4-20-21009
C 40	1	3C5-20-43000	6C0	CAP. 4300PF 1% 500V	EMR	3C5-20-43000
C 41	1	305-20-19200	600	CAP. 1920PF 1% 500V	EMR	305-20-19200
C 42	1	371-02-68201		CAP. .0682MF 2% 50V	AMER RADIUM	EM-MPA8PC
C 43	1	371-02-21401		CAP. .0214MF 2% 50V	AMER RADIUM	EM-MPA8PC
C 44	1	336-05-47002	601	CAP. .47MF 5% 35V	EMR	336-05-47002
C 46	1	336-07-22002		CAP.,.22MF 5% 75V	SPEC	601
C 47	1	337-05-47003	601	CAP. 4.7MF 5% 35V	EMR	337-05-47003
C 49	1	337-05-22003	601	CAP. 2.2MF 5% 35V	EMR	337-05-22003
C 50	1	301-13-10003		CAP,CR , 50V 1.00UF 20%	MML 48	8131-050-651-105M/MML
C 52	1	304-13-06909	600	CAP. 6MPF 1% 500V	EMR	304-13-06809
C 53	1	3C4-C1-C0309	6C0	CAP. 3PF .5PF 500V	EMR	3C4-01-00109
C 54	1	301-13-10002		CAP,CR , 50V .100 UF 20%	MML 48	8131-050-651-104M/MML
C 55	1	301-13-10002		CAP,CR , 50V .100 UF 20%	MML 48	8131-050-651-104M/MML
C 56	1	301-13-10003		CAP,CR , 50V 1.00UF 20%	MML 48	8131-050-651-105M/MML
C 57	1	304-13-06909	600	CAP. 6MPF 1% 500V	EMR	304-13-06809
C 58	1	304-01-00309	600	CAP. 3PF .5PF 500V	EMR	304-01-00109
C 59	1	301-13-10002		CAP,CR , 50V .100 UF 20%	MML 48	8131-050-651-104M/MML
C 60	1	301-13-10002		CAP,CR , 50V .100 UF 20%	MML 48	8131-050-651-104M/MML
C 61	1	337-14-68003	601	CAP. 6.8MF 10% 35V	EMR	337-14-68003
C 62	1	301-13-10003		CAP,CR , 50V 1.00UF 20%	MML 48	8131-050-651-105M/MML
CR 1 THRU CR 8	9	089-10-41480		DIODE,SW,75V/50UA,4NS/10MA	JEDEC	1N4149
CR 9	1	088-1C-09420		DIO,REF,11.7V/7.5MA,.005%	JEDEC	1N942
CR 10 THRU CR 43	34	088-10-41480		DIODE,SW,75V/50UA,4NS/10MA	JEDEC	1N4148
K 1 THRU K 3	3	219-98-00045		RELAY,2A RMOD CONT,26V	MATHAWAY	65630-37/GP-2A-26P
K 4 THRU K 12	9	219-99-C0027	28531-20	RELAY,1 FORM A,GOLD CONT	EMR	219-99-00027
K 13 THRU K 16	4	219-98-C0045		RELAY,2A RMOD CONT,26V	MATHAWAY	65630-37/GP-2A-26P
K 17 THRU K 33	17	219-99-C0027	28531-20	RELAY,1 FORM A,GOED CONT	EMR	219-99-C0027
K 34	1	219-99-C0028	28531-21	RELAY,2 FORM A,GOLD CONT	EMR	219-99-00028
K 35	1	219-55-CC019	28531-12	RELAY,2 FORM C,GOLD CONT	EMR	219-55-00019
Q 1	1	203-35-00039		XSTR,NPN,MAT.PR,VBE1-VBE2	AMPEREX	A642/S
Q 3 THRU Q 12	10	263-10-19310		XSTR,NPN 30V VHF/UHF AMPL	JEDEC	2N3933

FIRST USAGE MODEL 4147

ITEM NO.	QTY REQD	E M R NUMBER	DRAWING OR SPEC NO.	DESCRIPTION	VENDOR NAME	VENDOR PART NUMBER
Q 15	1	263-1C-22221		XSTR,NPN 75V,DC/UHF APPL	PHL A	2N2222A
R 1	1	616-02-01009		RES,10 OHM 5% 1/4W	ALLEN BRAD	RC07GF100J
R 2	1	616-02-82000		RES,8.2K 5% 1/4W	ALLEN BRAD	RC07GF822J
R 3	1	616-02-82000		RES,8.2K 5% 1/4W	ALLEN BRAD	RC07GF822J
R 4	1	616-02-10009		RES,100 OHM 5% 1/4W	ALLEN BRAD	RC07GF101J
R 5	1	616-02-56009		RES,560 OHM 5% 1/4W	ALLEN BRAD	RC07GF561J
R 6	1	201-98-00150		POT,TRMR, 10 OHM 20% .5W	BECK/MML27	62P410
R 7	1	616-02-56009		RES,560 OHM 5% 1/4W	ALLEN BRAD	RC07GF561J
R 8	1	616-02-30000		RES,3K 5% 1/4W	ALLEN BRAD	RC07GF302J
R 9	1	616-02-30000		RES,1K 5% 1/4W	ALLEN BRAD	RC07GF102J
R 11	1	616-02-C1009		RES,10 OHM 5% 1/4W	ALLEN BRAD	RC07GF100J
R 12	1	616-02-47000		RES,4.7K 5% 1/4W	ALLEN BRAD	RC07GF472J
R 13	1	616-02-47000		RES,4.7K 5% 1/4W	ALLEN BRAD	RC07GF472J
R 14	1	616-02-10009		RES,100 OHM 5% 1/4W	ALLEN BRAD	RC07GF101J
R 15	1	616-02-10001		RES,10K 5% 1/4W	ALLEN BRAD	RC07GF103J
R 16	1	616-02-10009		RES,100 OHM 5% 1/4W	ALLEN BRAD	RC07GF101J
R 17	1	616-02-10001		RES,10K 5% 1/4W	ALLEN BRAD	RC07GF103J
R 18	1	616-02-18000		RES,1.8K 5% 1/4W	ALLEN BRAD	RC07GF182J
R 19	1	616-02-18000		RES,1.8K 5% 1/4W	ALLEN BRAD	RC07GF182J
R 20	1	616-02-01009		RES,10 OHM 5% 1/4W	ALLEN BRAD	RC07GF100J
R 21	1	616-02-12002		RES,120K 5% 1/4W	ALLEN BRAD	RC07GF124J
R 22	1	616-02-10009		RES,100 OHM 5% 1/4W	ALLEN BRAD	RC07GF101J
R 23	1	616-02-15000		RES,1.5K 5% 1/4W	ALLEN BRAD	RC07GF152J
R 24	1	616-02-10009		RES,100 OHM 5% 1/4W	ALLEN BRAD	RC07GF101J
R 25	1	616-02-10001		RES,10K 5% 1/4W	ALLEN BRAD	RC07GF103J
R 26	1	616-02-10009		RES,100 OHM 5% 1/4W	ALLEN BRAD	RC07GF101J
R 27	1	616-02-10001		RES,10K 5% 1/4W	ALLEN BRAD	RC07GF103J
R 28	1	616-02-91009		RES,910 OHM 5% 1/4W	ALLEN BRAD	RC07GF911J
R 29	1	616-02-91009		RES,910 OHM 5% 1/4W	ALLEN BRAD	RC07GF911J
R 30	1	616-02-01009		RES,10 OHM 5% 1/4W	ALLEN BRAD	RC07GF100J
R 31	1	616-02-62009		RES,620 OHM 5% 1/4W	ALLEN BRAD	RC07GF621J
R 32	1	616-02-62009		RES,620 OHM 5% 1/4W	ALLEN BRAD	RC07GF621J
R 33	1	616-02-10009		RES,100 OHM 5% 1/4W	ALLEN BRAD	RC07GF101J
R 34	1	616-02-43009		RES, 430 OHM 5% 1/4W	ALLEN BRAD	RC07GF431J
R 35	1	616-02-10009		RES,100 OHM 5% 1/4W	ALLEN BRAD	RC07GF101J
R 36	1	616-02-91009		RES,910 OHM 5% 1/4W	ALLEN BRAD	RC07GF911J
R 37	1	616-02-91009		RES,910 OHM 5% 1/4W	ALLEN BRAD	RC07GF911J
R 38	1	616-02-01009		RES,10 OHM 5% 1/4W	ALLEN BRAD	RC07GF100J
R 39	1	616-02-01009		RES,10 OHM 5% 1/4W	ALLEN BRAD	RC07GF100J
R 40	1	616-02-10009		RES,100 OHM 5% 1/4W	ALLEN BRAD	RC07GF101J
R 41	1	608-09-90909	624	RES, 909.0 OHM 1% 1/10W	EMR	608-09-90909
R 42	1	616-02-56009		RES,560 OHM 5% 1/4W	ALLEN BRAD	RC07GF561J
R 43	1	616-02-10009		RES,100 OHM 5% 1/4W	ALLEN BRAD	RC07GF101J
R 44	1	609-09-00000	624	RES, 1/8W		
R 45	1	616-02-10009		RES,100 OHM 5% 1/4W	ALLEN BRAD	RC07GF101J
R 46	1	609-09-00000	624	RES, 1/8W		
R 47	1	616-02-56009		RES,560 OHM 5% 1/4W	ALLEN BRAD	RC07GF561J
R 48	1	616-02-10009		RES,100 OHM 5% 1/4W	ALLEN BRAD	RC07GF101J
R 49	1	608-09-90909	624	RES, 909.0 OHM 1% 1/10W	EMR	608-09-90909

FIRST USAGE MODEL 4142

ITEM NO.	QTY REQD	E M R NUMBER	DRAWING OR SPEC NO.	DESCRIPTION	VENDOR NAME	VENDOR PART NUMBER
R 50	1	608-09-00000	624	RES,*T/VAR*		
R 51	1	608-09-00000	624	RES,*T/VAR*		
R 52	1	60A-09-10000	624	RES. 1K 1% 1/10W	EMR	608-09-10000
R 53	1	616-02-15009		RES,150 OHM 5% 1/4W	ALLEN BRAD	RC07GF151J
R 54	1	60A-09-10000	624	RES. 1K 1% 1/10W	EMR	608-09-10000
R 55	1	608-09-00000	624	RES,*T/VAR*		
R 56	1	608-09-75009	624	RES. 750.0 OHM 1% 1/10W	EMR	608-09-75009
R 57	1	608-09-75009	624	RES. 750.0 OHM 1% 1/10W	EMR	60A-09-75009
R 60	1	616-02-39009		RES,390 OHM 5% 1/4W	ALLEN BRAD	RC07GF391J
R 61	1	616-02-47009		RES,470 OHM 5% 1/4W	ALLEN BRAD	RC07GF471J
R 62	1	608-09-24900	624	RES. 2.49K 1% 1/10W	EMR	608-09-24900
R 63	1	60A-09-49900	624	RES. 4.99K 1% 1/10W	EMR	608-09-49900
R 64	1	60A-09-10001	624	RES. 10K 1% 1/10W	EMR	608-09-10001
R 65	1	608-09-20001	624	RES. 20K 1% 1/10W	EMR	608-09-20001
R 66	1	608-09-24909	624	RES. 249.0 OHM 1% 1/10W	EMR	608-09-24909
R 67	1	608-09-49909	624	RES. 499.0 OHM 1% 1/10W	EMR	60A-09-49909
R 68	1	608-09-10000	624	RES. 1K 1% 1/10W	EMR	60A-09-10000
R 69	1	60A-09-20000	624	RES. 2.0K 1% 1/10W	EMR	608-09-20000
R 70	1	608-09-11802	624	RES. 118.0K 1% 1/10W	EMR	60A-09-11802
R 71	1	201-99-00063		POT,TRMR, 20 K 10% .5W	BECK/MML27	62P820K
R 72	1	609-09-11802	624	RES. 118.0K 1% 1/10W	EMR	60A-09-11802
R 73	1	616-02-20009		RES,200 OHM 5% 1/4W	ALLEN BRAD	RC07GF201J
R 74	1	60A-09-10002	624	RES. 100.0K 1% 1/10W	EMR	608-09-10002
R 75	1	608-09-20002	624	RES. 200.0K 1% 1/10W	EMR	608-09-20002
R 76	1	608-09-40202	624	RES. 402.0K 1% 1/10W	EMR	60A-09-40202
R 77	1	60A-01-80602	624	RES. 806K 1% 1/10W 100 PP	EMR	60A-01-80602
R 78	1	616-02-00000		RES.,*T/VAR* 5% 1/4W		
R 79	1	60A-09-10201	624	RES. 10.2K 1% 1/10W	EMR	608-09-10201
R 80	1	616-02-00000		RES.,*T/VAR* 5% 1/4W		
R 81	1	60A-09-20501	624	RES. 20.5K 1% 1/10W	EMR	60A-09-20501
R 82	1	616-02-00000		RES.,*T/VAR* 5% 1/4W		
R 83	1	60A-09-41201	624	RES. 41.2K 1% 1/10W	EMR	608-09-41201
R 84	1	616-02-00000		RES.,*T/VAR* 5% 1/4W		
R 85	1	60A-09-80601	624	RES. 80.6K 1% 1/10W	EMR	608-09-80601
R 86	1	60A-09-00000	624	RES.,*T/VAR* 1% 1/10W		
R 87	1	608-09-10200	624	RES. 1.02K 1% 1/10W	EMR	608-09-10200
R 88	1	608-09-00000	624	RES.,*T/VAR* 1% 1/10W		
R 89	1	60A-09-20500	624	RES. 2.05K 1% 1/10W	EMR	608-09-20500
R 90	1	608-09-00000	624	RES.,*T/VAR* 1% 1/10W		
R 91	1	60A-09-41200	624	RES. 4.12K 1% 1/10W	EMR	608-09-41200
R 92	1	609-09-00000	624	RES, *TAVAR*,1% 1/10W		
R 93	1	60A-09-80600	624	RES. 8.06K 1% 1/10W	EMR	608-09-80600
R 94	1	609-09-00000	624	RES. *T/VAR* 1% 1/10W		
R 95	1	604 05-80609	624	RES. 806.0 OHM 1% 1/10W	EMR	60A-09-80609
R 96	1	201-99-00063		POT,TRMR, 20 K 10% .5W	BECK/MML27	62P820K
R 98	1	616-02-01009		RES,10 OHM 5% 1/4W	ALLEN BRAD	RC07GF100J
R 99	1	616-02-01009		RES,10 OHM 5% 1/4W	ALLEN BRAD	RC07GF100J
R 100	1	608-09-00000	624	RES. *T/VAR* 1% 1/10W		
R 101	1	609-09-00000	624	RES. *T/VAR* 1% 1/10W		

FIRST USAGE MODEL 4142

A4
SPARE BOARD

205-89-00719 17396-2 SHT 5 OF 5

ITEM NO.	QTY REQD	E M R NUMBER	DRAWING OR SPEC NO.	DESCRIPTION	VENDOR NAME	VENDOR PART NUMBER
R 102	1	616-02-20009		RES,200 OHM 5% 1/4W	ALLEN BRAD	RC07GF201J
R 103	1	608-09-23700	624	RES., 2.37K 1% 1/10W	EMR	608-09-23700
R 104	1	608-09-34800	624	RES, 3.48K 1% 1/10W	EMR	608-09-34800
R 105	1	608-09-63400	624	RES, 6.34K 1% 1/10W	EMR	608-09-63400
R 106	1	608-09-10501	624	RES, 10.5K 1% 1/10W	EMR	608-09-10501
R 107	1	608-09-10501	624	RES, 10.5K 1% 1/10W	EMR	608-09-10501
R 109	1	616-02-01009		RES,10 OHM 5% 1/4W	ALLEN BRAD	RC07GF100J
R 110	1	616-02-01009		RES,10 OHM 5% 1/4W	ALLEN BRAD	RC07GF100J
R 111	1	616-02-05607		RES,56 OHM 5% 1/4W	ALLEN BRAD	RC07GF560J
R 112	1	608-09-CCCCC	624	RES, 0T/VARO 1% 1/10W		
R 113	1	616-02-00000		RES,0T/VARO 5% 1/4W		
R 114	1	616-02-00000		RES,0T/VARO 5% 1/4W		
R 115	1	608-09-64901	624	RES, 64.9K 1% 1/10W	EMR	608-09-64901
R 116	1	608-09-00000	624	RES, 0T/VARO		
U 1	1	046-97-00709		IC,LIN APPL,OPNL HS SLEW	HARRIS/HMI40	HA2-2525-5
U 2	1	046-97-00709		IC,LIN APPL,OPNL HS SLEW	HARRIS/HMI40	HA2-2525-5
REF 1	1	905-01-00539	17396	SCHEMATIC,PBA	EMR	905-01-00539
REF 2	1	905-04-00002	9500-1	SPEC,COMPONENT SPACING	EMR	905-04-00002

FIRST USAGE MODEL 4142

EMR - TELEMETRY

PARTS LIST 21777 REV DATE 03/14/74 REV LTR B

LIST TITLE PWA, DETECTOR SWITCHES CHGS CONT NO. CODE IDENT SHT 1 OF 1
PART NO. 205-89-01014 ECO RECORD 1 06141 CKD BY

ITEM NO.	QTY REQD	EMR NUMBER	DRAWING OR SPEC NO.	DESCRIPTION	VENDOR NAME	VENDOR PART NUMBER
1	1	204-89-00378	21776	PWB,DETECTOR SWITCHES	EMR	204-89-00378
2	1	189-98-00004		PAD,XSTR 4 PINHOUSE OPTO*	DEL BLINN	ICO-C00-NY
CR 1	1	088-99-00099	642-00	DIODE,ZENER 0.4W 3.3V	EMR	088-59-00099
CR 2	4	088-19-00029	23200	DIO,4 PELLET 90V VF 2.47V	EMR	088-19-00029
THRU						
CR 5						
CR 6	1	088-59-00099	642-00	DIODE,ZENER 0.4W 3.3V	EMR	088-59-00099
Q 1	1	263-97-00073		XSTR,PNP,SWITCH/AMPL,50V	MML 4	2N3251/2N3251A
R 1	1	608-09-16901	624	RES, 16.9K 1% 1/10W	EMR	608-09-16901
R 2	1	608-C9-C0000		RES,*TEST/VAR*		
R 3	1	608-C9-75001	624	RES, 75.0K 1% 1/10W	EMR	608-09-75001
R 4	1	616-02-10001		RES,10K 5% 1/4W	ALLEN BRAD	RC07GF103J
R 5	1	616-02-10001		RES,10K 5% 1/4W	ALLEN BRAD	RC07GF103J
R 6	1	608-C9-75001	624	RES, 75.0K 1% 1/10W	EMR	608-09-75001
R 7	1	608-09-15801	624	RES, 15.8K 1% 1/10W	EMR	608-09-15801
R 8	1	616-02-47000		RES,4.7K 5% 1/4W	ALLEN BRAD	RC07GF472J
R 9	1	608-05-80600	624	RES, 8.06K 1% 1/10W	EMR	608-09-80600
R 10	4	608-09-49909	624	RES, 499.0 OHM 1% 1/10W	EMR	608-09-49909
THRU						
R 13						
U 1	1	046-99-00002	22512	IC,LIN DIFF PR,TEMP-CONT	EMR	046-99-00002
U 2	1	046-99-00002	22512	IC,LIN DIFF PR,TEMP-CONT	EMR	046-99-00002
REF 1	1	905-C1-C0716	21775	SCHEMATIC, PWB	EMR	905-C1-C0716
REF 2	1	905-C4-C0001	9500	SPEC,COMPONENT SPACING	EMR	905-04-00001

FIRST USAGE MODEL 4142

All

EMR - TELEMETRY

PARTS LIST 16657 REV DATE 04/16/76 REV LTR E

LIST TITLE PWA,PULE PAIR CHGE CONT NO. CODE IDENT SHT 1 OF 2
PART NO. 205-89-C0712 ECO RECORD 2 06141 CKD BY

ITEM NO.	QTY REQD	EMR NUMBER	DRAWING OR SPEC NO.	DESCRIPTION	VENDOR NAME	VENDOR PART NUMBER
1	1	204-99-00506	16656	PWA,PULE PAIR	EMR	204-99-00506
2	2	259-99-00012	6477-11	EJCTR,CARD,.062BD,PCSA12	EMR	259-99-00012
3	2	189-98-00011		PAD,XSTR,TO-5 8PIN,.075M	MILTON ROSS	10193-0AP
C 1	1	707-01-22403	904	CAP.. 2.24MF 1% 50V	EMR	707-01-22403
C 2	1	707-01-31803	904	CAP.. 3.18MF 1% 50V	EMR	707-01-31803
C 3	1	707-01-22402	904	CAP.. 0.224MF 1% 50V	EMR	707-01-22402
C 4	1	707-01-31802	904	CAP.. 0.318MF 1% 50V	EMR	707-01-31802
C 5	1	707-01-22401	904	CAP.. .0224MF 1% 50V	EMR	707-01-22401
C 6	1	707-01-31801	904	CAP.. .0318MF 1% 50V	EMR	707-01-31801
C 7	1	305-20-20000	600	CAP. 2000PF 1% 500V	EMR	305-20-20000
C 8	1	305-20-10000	600	CAP. 1000PF 1% 500V	EMR	305-20-10000
C 9	1	304-00-00000	600	CAP,*T/VAR*		
C 10	1	304-20-20009	600	CAP. 200PF 1% 500V	EMR	304-20-20009
C 11	1	707-01-22403	904	CAP.. 2.24MF 1% 50V	EMR	707-01-22403
C 12	1	707-01-15203	904	CAP.. 1.52MF 1% 50V	EMR	707-01-15203
C 13	1	707-01-22402	904	CAP.. 0.224MF 1% 50V	EMR	707-01-22402
C 14	1	707-01-15202	904	CAP.. .152MF 1% 50V	EMR	707-01-15202
C 15	1	707-01-22401	904	CAP.. .0224MF 1% 50V	EMR	707-01-22401
C 16	1	707-01-15201	904	CAP.. .0152MF 1% 50V	EMR	707-01-15201
C 17	1	305-20-20000	600	CAP. 2000PF 1% 500V	EMR	305-20-20000
C 18	1	305-20-13000	600	CAP. 1300PF 1% 500V	EMR	305-20-13000
C 19	1	304-20-25009	600	CAP. 250PF 1% 500V	EMR	304-20-25009
C 20	1	304-20-13009	600	CAP. 130PF 1% 500V	EMR	304-20-13009
C 21	1	301-13-10002		CAP,CR , 50V .100 UF 20%	MRL 4A	8131-050-651-104M/MRL
C 23	1	301-13-10002		CAP,CR , 50V .100 UF 20%	MRL 4A	8131-050-651-104M/MRL
C 24	1	337-14-68003	601	CAP. 6.8MF 10% 35V	EMR	337-14-68003
C 25	1	301-13-10002		CAP,CR , 50V .100 UF 20%	MRL 4A	8131-050-651-104M/MRL
C 27	1	301-13-10002		CAP,CR , 50V .100 UF 20%	MRL 4A	8131-050-651-104M/MRL
C 28	1	337-14-68003	601	CAP. 6.8MF 10% 35V	EMR	337-14-68003
C 29	1	337-14-68003	601	CAP. 6.8MF 10% 35V	EMR	337-14-68003
C 30	1	304-20-15009	600	CAP. 150PF 1% 500V	EMR	304-20-15009
C 31	1	304-13-05909	600	CAP. 59PF 1% 500V	EMR	304-13-05909
C 32	1	304-20-15009	600	CAP. 150PF 1% 500V	EMR	304-20-15009
C 33	1	304-20-11009	600	CAP. 110PF 1% 500V	EMR	304-20-11009
C 34	1	304-20-10009	600	CAP. 100PF 1% 500V	EMR	304-20-10009
C 35	1	304-00-00000	600	CAP,*T/VAR*		
THRU						
C 37						
CR 1	19	084-10-41480		DIODE,SW,75V/5UA,4NS/10MA	JEDEC	1N4148
THRU						
CR 19						
K 1	9	219-99-00028	28531-21	RELAY,2 FORM A,GOLD CONT	EMR	219-99-00028
THRU						
K 9						
K 10	5	219-99-00023	28531-16	RELAY,4 FORM A,RHOD CONT	EMR	219-99-00023
THRU						
K 14						

FIRST USAGE MODEL 4142

205-89-00712 16657 SHT 2 OF 2

ITEM NO.	QTY REQD	E M R NUMBER	DRAWING OR SPEC NO.	DESCRIPTION	VENDOR NAME	VENDOR PART NUMBER
K 15	1	219-99-00019	28531-12	RELAY,2 FORM C,GOLD CONT	EMR	219-99-00019
R 1	1	605-09-10002	625	RES. 100K 1% 1/8W	EMR	605-09-10002
R 2	1	605-09-49901	625	RES. 49.9K 1% 1/8W	EMR	605-09-49901
R 3	1	605-09-24901	625	RES. 24.9K 1% 1/8W	EMR	605-09-24901
R 4	1	605-09-12401	625	RES. 12.4K 1% 1/8W	EMR	605-09-12401
R 5	1	605-09-12401	625	RES. 12.4K 1% 1/8W	EMR	605-09-12401
R 6	1	605-09-12701	625	RES. 12.7K 1% 1/8W	EMR	605-09-12701
R 7	1	605-09-49900	625	RES. 4.99K 1% 1/8W	EMR	605-09-49900
R 8	1	605-09-24900	625	RES. 2.49K 1% 1/8W	EMR	605-09-24900
R 9	1	605-09-12400	625	RES. 1.24K 1% 1/8W	EMR	605-09-12400
R 10	1	605-09-12400	625	RES. 1.24K 1% 1/8W	EMR	605-09-12400
R 11	1	605-09-12700	625	RES. 1.27K 1% 1/8W	EMR	605-09-12700
R 12	1	616-02-01009		RES,10 OHM 5% 1/4W	ALLEN BRAD	RC07GF100J
R 13	1	616-02-10009		RES,100 OHM 5% 1/4W	ALLEN BRAD	RC07GF101J
R 15	1	616-02-51000		RES,5.1K 5% 1/4W	ALLEN BRAD	RC07GF512J
R 16	1	616-02-10009		RES,100 OHM 5% 1/4W	ALLEN BRAD	RC07GF101J
R 17	1	605-09-10002	625	RES. 100K 1% 1/8W	EMR	605-09-10002
R 18	1	605-09-49901	625	RES. 49.9K 1% 1/8W	EMR	605-09-49901
R 19	1	605-09-24901	625	RES. 24.9K 1% 1/8W	EMR	605-09-24901
R 20	1	605-09-12401	625	RES. 12.4K 1% 1/8W	EMR	605-09-12401
R 21	1	605-09-12401	625	RES. 12.4K 1% 1/8W	EMR	605-09-12401
R 22	1	605-09-12701	625	RES. 12.7K 1% 1/8W	EMR	605-09-12701
R 23	1	605-09-49900	625	RES. 4.99K 1% 1/8W	EMR	605-09-49900
R 24	1	605-09-24900	625	RES. 2.49K 1% 1/8W	EMR	605-09-24900
R 25	1	605-09-12400	625	RES. 1.24K 1% 1/8W	EMR	605-09-12400
R 26	1	605-09-12400	625	RES. 1.24K 1% 1/8W	EMR	605-09-12400
R 27	1	605-09-12700	625	RES. 1.27K 1% 1/8W	EMR	605-09-12700
R 28	1	616-02-10009		RES,100 OHM 5% 1/4W	ALLEN BRAD	RC07GF101J
R 29	1	201-98-00138		POT,TRMR,1.0 K 10%.75W	BECK/MML27	79PR1K
R 30	1	616-02-51000		RES,5.1K 5% 1/4W	ALLEN BRAD	RC07GF512J
R 31	1	616-02-10009		RES,100 OHM 5% 1/4W	ALLEN BRAD	RC07GF101J
R 32	1	616-02-01009		RES,10 OHM 5% 1/4W	ALLEN BRAD	RC07GF100J
R 33	1	616-02-01009		RES,10 OHM 5% 1/4W	ALLEN BRAD	RC07GF100J
R 34	1	605-09-00000	625	RES,*T/VAR* 1% 1/8W		
R 35	1	616-02-10002		RES,100K 5% 1/4W	ALLEN BRAD	RC07GF104J
TP 1 THRU TP 3	3	143-98-00017		JACK,TEST PT,PW TYPE,RED	AMP INC.	3-582340-2
U 1	1	046-34-00014		IC,LIN VOLTAGE FOLLOWER	NSC/MML40	LM310H
U 2	1	046-34-00014		IC,LIN VOLTAGE FOLLOWER	NSC/MML40	LM310H
REF 1	1	905-01-00540	16655	SCHEMATIC,PWA	EMR	905-01-00540
REF 2	1	905-04-00002	9500-1	SPEC,COMPONENT SPACING	EMR	905-04-00002

FIRST USAGE MODEL 4142

(Rev. F)

A11

EMR - TELEMETRY

PARTS LIST 16657-1 REV DATE 04/16/76 REV LTR G

LIST TITLE PWA,POLE PAIR CHGE CONT NO. CODE IDENT SHT 1 OF 2
PART NO. 205-89-C0713 ECO RECORD 2 06141 CKD BY

ITEM NO.	QTY REQD	EMR NUMBER	DRAWING OR SPEC NO.	DESCRIPTION	VENDOR NAME	VENDOR PART NUMBER
1	1	204-59-C0506	16656	PWB,POLE PAIR	EMR	204-99-C0506
2	2	299-99-00011	6477-10	EJCTR,CARD,.062BD,PCSNLI	EMR	299-99-00011
3	2	189-98-C0011		PAD,XSTR,TO-5 8PIN,.075H	MILTON ROSS	1C193-DAP
C 1	1	707-01-41803	904	CAP.. 4.15MF 1% 50V	EMR	707-01-41803
C 2	1	707-01-36353	904	CAP.. 3.635MF 1% 50V	EMR	707-01-36353
C 3	1	707-01-41802	904	CAP.. .418MF 1% 50V	EMR	707-01-41802
C 4	1	707-01-36352	904	CAP.. .3635MF 1% 50V	EMR	707-01-36352
C 5	1	707-01-41801	904	CAP.. .0418 1% 50V	EMR	707-01-41801
C 6	1	707-01-36351	904	CAP.. .03635MF 1% 50V	EMR	707-01-36351
C 7	1	305-20-39000	600	CAP. 3900PF 1% 500V	EMR	305-20-39000
C 8	1	305-20-33000	600	CAP. 3300PF 1% 500V	EMR	305-20-33000
C 9	1	304-20-26009	600	CAP. 260PF 1% 500V	EMR	304-20-26009
C 10	1	304-20-27009	600	CAP. 270PF 1% 500V	EMR	304-20-27009
C 11	1	707-01-15903	904	CAP.. 1.59MF 1% 50V	EMR	707-01-15903
C 12	1	707-01-11503	904	CAP.. 1.15MF 1% 50V	EMR	707-01-11503
C 13	1	707-01-15902	904	CAP.. .159MF 1% 50V	EMR	707-01-15902
C 14	1	707-01-11502	904	CAP.. .115MF 1% 50V	EMR	707-01-11502
C 15	1	707-01-15901	904	CAP.. .0159MF 1% 50V	EMR	707-01-15901
C 16	1	707-01-11501	904	CAP.. .0115PF 1% 50V	EMR	707-01-11501
C 17	1	305-20-13000	600	CAP. 1300PF 1% 500V	EMR	305-20-13000
C 18	1	305-20-10000	600	CAP.. 1000PF 1% NON-STD	EMR	305-20-10000
C 19	1	304-00-00000	600	CAP..*T/V*N*		
C 20	1	304-20-10009	600	CAP. 100PF 1% 500V	EMR	304-20-10009
C 21	1	301-13-10002		CAP,CR , 50V .100 UF 20%	MPL 48	8131-050-651-104M/MPL
C 23	1	301-13-10002		CAP,CR , 50V .100 UF 20%	MPL 48	8131-050-651-104M/MPL
C 24	1	337-14-68003	601	CAP. 6.8MF 10% 35V	EMR	337-14-68003
C 25	1	301-13-10002		CAP,CR , 50V .100 UF 20%	MPL 48	8131-050-651-104M/MPL
C 27	1	301-13-10002		CAP,CR , 50V .100 UF 20%	MPL 48	8131-050-651-104M/MPL
C 28	1	337-14-68003	601	CAP. 6.8MF 10% 35V	EMR	337-14-68003
C 29	1	337-14-68003	601	CAP. 6.8MF 10% 35V	EMR	337-14-68003
C 30	1	304-20-27009	600	CAP. 270PF 1% 500V	EMR	304-20-27009
C 31	1	304-20-24009	600	CAP. 240PF 1% 500V	EMR	304-20-24009
C 32	1	304-20-16009	600	CAP. 160PF 1% 500V	EMR	304-20-16009
C 33	1	304-01-01009	600	CAP. 10PF .5PF 500V	EMR	304-01-01009
C 34	1	304-09-04709	600	CAP. 47PF .5PF 500V	EMR	304-09-04709
C 35	1	304-01-00409	600	CAP. 4PF .5PF 500V	EMR	304-01-00409
C 36	1	304-20-14009	600	CAP. 140PF 1% 500V	EMR	304-20-14009
C 37	1	304-01-00809	600	CAP. 8PF, .5PF 500V	EMR	304-01-00809
CR 1 THRU CR 19	19	083-10-41480		DIODE,SW,75V/50A,4NS/10MA	JEDEC	1N4148
K 1 THRU K 9	9	219-99-00028	28531-21	RELAY,2 FORM A,GOLD CONT	EMR	219-99-00028
K 10 THRU K 14	5	219-99-00023	28531-16	RELAY,4 FORM A,RHOD CONT	EMR	219-99-00023

FIRST USAGE MODEL 4142

ITEM NO.	QTY REQD	E M R NUMBER	DRAWING OR SPEC NO.	DESCRIPTION	VENDOR NAME	VENDOR PART NUMBER
K 15	1	219-99-00019	28531-12	RELAY,2 FORM C,GOLD CONT	EMR	219-99-00019
R 1	1	605-09-10002	625	RES. 100K 1% 1/8W	EMR	605-09-10002
R 2	1	605-09-49901	625	RES. 49.9K 1% 1/8W	EMR	605-09-49901
R 3	1	605-09-24901	625	RES. 24.9K 1% 1/8W	EMR	605-09-24901
R 4	1	605-09-12401	625	RES. 12.4K 1% 1/8W	EMR	605-09-12401
R 5	1	605-09-12401	625	RES. 12.4K 1% 1/8W	EMR	605-09-12401
R 6	1	605-09-12701	625	RES. 12.7K 1% 1/8W	EMR	605-09-12701
R 7	1	605-09-49900	625	RES. 4.99K 1% 1/8W	EMR	605-09-49900
R 8	1	605-09-24900	625	RES. 2.49K 1% 1/8W	EMR	605-09-24900
R 9	1	605-09-12400	625	RES. 1.24K 1% 1/8W	EMR	605-09-12400
R 10	1	605-09-12400	625	RES. 1.24K 1% 1/8W	EMR	605-09-12400
R 11	1	605-09-12700	625	RES. 1.27K 1% 1/8W	EMR	605-09-12700
R 12	1	616-02-01009		RES,10 OHM 5% 1/4W	ALLEN BRAD	RC07GF100J
R 13	1	616-02-10009		RES,100 OHM 5% 1/4W	ALLEN BRAD	RC07GF101J
R 14	1	616-02-51009		RES,5.1K 5% 1/4W	ALLEN BRAD	RC07GF512J
R 16	1	616-02-10009		RES,100 OHM 5% 1/4W	ALLEN BRAD	RC07GF101J
R 17	1	605-09-10002	625	RES. 100K 1% 1/8W	EMR	605-09-10002
R 18	1	605-09-49901	625	RES. 49.9K 1% 1/8W	EMR	605-09-49901
R 19	1	605-09-24901	625	RES. 24.9K 1% 1/8W	EMR	605-09-24901
R 20	1	605-09-12401	625	RES. 12.4K 1% 1/8W	EMR	605-09-12401
R 21	1	605-09-12401	625	RES. 12.4K 1% 1/8W	EMR	605-09-12401
R 22	1	605-09-12701	625	RES. 12.7K 1% 1/8W	EMR	605-09-12701
R 23	1	605-09-49900	625	RES. 4.99K 1% 1/8W	EMR	605-09-49900
R 24	1	605-09-24900	625	RES. 2.49K 1% 1/8W	EMR	605-09-24900
R 25	1	605-09-12400	625	RES. 1.24K 1% 1/8W	EMR	605-09-12400
R 26	1	605-09-12400	625	RES. 1.24K 1% 1/8W	EMR	605-09-12400
R 27	1	605-09-12700	625	RES. 1.27K 1% 1/8W	EMR	605-09-12700
R 28	1	616-02-10009		RES,100 OHM 5% 1/4W	ALLEN BRAD	RC07GF101J
R 29	1	201-98-00138		POT,TRMR,1.0 K 10%.75W	BLCK/MML27	7SPM1K
R 30	1	616-02-51008		RES,5.1K 5% 1/4W	ALLEN BRAD	RC07GF512J
R 31	1	616-02-10009		RES,100 OHM 5% 1/4W	ALLEN BRAD	RC07GF101J
R 32	1	616-02-01009		RES,10 OHM 5% 1/4W	ALLEN BRAD	RC07GF100J
R 33	1	616-02-01009		RES,10 OHM 5% 1/4W	ALLEN BRAD	RC07GF100J
R 34	1	605-09-00000	625	RES,POT/VAR* 1% 1/8W		
R 35	1	616-02-10007		RES,100K 5% 1/4W	ALLEN BRAD	RC07GF104J
TP 1 THRU TP 3	3	141-98-00017		JACK,TEST PT,PW TYPE,RED	AMP INC.	3-582340-2
U 1	1	646-14-00014		IC,LIN VOLTAGE FOLLOWER	NSC/PML40	LM310M
U 2	1	646-14-00014		IC,LIN VOLTAGE FOLLOWER	NSC/PML40	LM310M
REF 1	1	905-01-00540	16655	SCHEMATIC,PWA	EMR	905-01-00540
REF 2	1	905-04-00002	9500-1	SPEC,COMPONENT SPACING	EMR	905-04-00002

FIRST USAGE MODEL 4142

A12

EMR - TELEMETRY

PARTS LIST 16657-2 REV DATE 04/16/76 REV LTR F

LIST TITLE PWA,POLE PAIR CHGE CONT NO. CODE IDENT SHT 1 OF 2
PART NO. 205-89-00714 ECO RECORD 2 06141 CKD BY

ITEM NO.	QTY REQD	EMR NUMBER	DRAWING OR SPEC NO.	DESCRIPTION	VENDOR NAME	VENDOR PART NUMBER
1	1	204-99-00506	16656	PWB,POLE PAIR	EMR	204-99-00506
2	2	299-99-00012	6477-11	EJCTR,CARD,.062BD,PCSN12	EMR	299-99-00012
3	2	180-99-00011		PAD,KSTK,TO-5 APIN,.075H	MILTON ROSS	10193-DAP
C 1	1	707-01-15903	904	CAP.,1.59MF 1% 50V	EMR	707-01-15903
C 2	1	707-01-19803	904	CAP.,1.99MF 1% 50V	EMR	707-01-19803
C 3	1	707-01-15902	904	CAP.,.159MF 1% 50V	EMR	707-01-15902
C 4	1	707-01-19802	904	CAP.,.199MF 1% 50V	EMR	707-01-19802
C 5	1	707-01-15901	904	CAP.,.0159MF 1% 50V	EMR	707-01-15901
C 6	1	707-01-19801	904	CAP.,.0199MF 1% 50V	EMR	707-01-19801
C 7	1	305-20-13000	600	CAP. 1300PF 1% 500V	EMR	305-20-13000
C 8	1	305-20-18000	600	CAP. 1800PF 1% 500V	EMR	305-20-18000
C 9	1	304-00-00000	600	CAP.,*T/VAR*		
C 10	1	304-13-08209	600	CAP. 82PF 1% 500V	EMR	304-13-08209
C 11	1	707-01-41803	904	CAP.,4.1MF 1% 50V	EMR	707-01-41803
C 12	1	707-01-16653	904	CAP.,1.665MF 1% 50V	EMR	707-01-16653
C 13	1	707-01-41802	904	CAP.,.41MF 1% 50V	EMR	707-01-41802
C 14	1	707-01-16652	904	CAP.,.1665PF 1% 50V	EMR	707-01-16652
C 15	1	707-01-41801	904	CAP.,.041M 1% 50V	EMR	707-01-41801
C 16	1	707-01-16651	904	CAP.,.01665MF 1% 50V	EMR	707-01-16651
C 17	1	305-20-33000	600	CAP. 3900PF 1% 500V	EMR	305-20-39000
C 18	1	305-20-15000	600	CAP. 1500PF 1% 500V	EMR	305-20-15000
C 19	1	304-41-68009	600	CAP. 680PF 1% 300V	EMR	304-41-68009
C 20	1	304-20-16009	600	CAP. 160PF 1% 500V	EMR	304-20-16009
C 21	1	301-13-10002		CAP,CR , 50V .100 UF 20%	MRL 48	8131-050-651-104M/MRL
C 23	1	401-13-10002		CAP,CR , 50V .100 UF 20%	MRL 48	8131-050-651-104M/MRL
C 24	1	337-14-68003	601	CAP. 6.8MF 10% 35V	EMR	337-14-68003
C 25	1	301-13-10002		CAP,CR , 50V .100 UF 20%	MRL 48	8131-050-651-104M/MRL
C 27	1	401-13-10002		CAP,CR , 50V .100 UF 20%	MRL 48	8131-050-651-104M/MRL
C 28	1	337-14-68003	601	CAP. 6.8MF 10% 35V	EMR	337-14-68003
C 29	1	337-14-68003	601	CAP. 6.8MF 10% 35V	EMR	337-14-68003
C 30	1	304-20-10009	600	CAP. 100PF 1% 500V	EMR	304-20-10009
C 31	1	304-13-07409	600	CAP. 74PF 1% 500V	EMR	304-13-07409
C 32	1	304-41-56009	600	CAP. 560PF 1% 300V	EMR	304-41-56009
C 33	1	304-20-21009	600	CAP. 210PF 1% 500V	EMR	304-20-21009
C 34	1	304-13-07009	600	CAP. 70PF 1% 500V	EMR	304-13-07009
C 35	1	305-00-00000	600	CAP.,*T/VAR*		
C 36	1	304-08-02209	600	CAP.,22PF .5PF 500V	EMR	304-08-02209
C 37	1	304-01-01609	600	CAP. 16PF .5PF 500V	EMR	304-01-01609
CR 1 THRU CR 19	19	038-10-41480		*DIODE,5W175V/50A,4NSW/10MA	JEDEC	1N4148
K 1 THRU K 9	9	219-99-00028	28531-21	RELAY,2 FORM A,GOLD CONT	EMR	219-99-00028
K 10 THRU K 14	5	219-99-00023	28531-16	RELAY,4 FORM A,MNCD CONT	EMR	219-99-00023

FIRST USAGE MODEL 4142

ITEM NO.	QTY REQD	E M R NUMBER	DRAWING OR SPEC NO.	DESCRIPTION	VENDOR NAME	VENDOR PART NUMBER
K 15	1	219-99-00019	24531-12	RELAY,2 FORM C,GOLD CONT	EMR	219-99-00019
R 1	1	605-09-10002	625	RES. 100K 1% 1/8W	EMR	605-09-10002
R 2	1	605-09-49901	625	RES. 49.9K 1% 1/8W	EMR	605-09-49901
R 3	1	605-09-24901	625	RES. 24.9K 1% 1/8W	EMR	605-09-24901
R 4	1	605-09-12401	625	RES. 12.4K 1% 1/8W	EMR	605-09-12401
R 5	1	605-09-12401	625	RES. 12.4K 1% 1/8W	EMR	605-09-12401
R 6	1	605-09-12701	625	RES. 12.7K 1% 1/8W	EMR	605-09-12701
R 7	1	605-09-49900	625	RES. 4.99K 1% 1/8W	EMR	605-09-49900
R 8	1	605-09-24900	625	RES. 2.49K 1% 1/8W	EMR	605-09-24900
R 9	1	605-09-12400	625	RES. 1.24K 1% 1/8W	EMR	605-09-12400
R 10	1	605-09-12400	625	RES. 1.24K 1% 1/8W	EMR	605-09-12400
R 11	1	605-09-12700	625	RES. 1.27K 1% 1/8W	EMR	605-09-12700
R 12	1	616-02-01009		RES,10 OHM 5% 1/4W	ALLEN BRAD	RC07GF100J
R 13	1	616-02-10009		RES,100 OHM 5% 1/4W	ALLEN BRAD	RC07GF101J
R 15	1	616-02-51000		RES,5.1K 5% 1/4W	ALLEN BRAD	RC07GF512J
R 16	1	616-02-10003		RES,100 OHM 5% 1/4W	ALLEN BRAD	RC07GF101J
R 17	1	605-09-10002	625	RES. 100K 1% 1/8W	EMR	605-09-10002
R 18	1	605-09-49901	625	RES. 49.9K 1% 1/8W	EMR	605-09-49901
R 19	1	605-09-24901	625	RES. 24.9K 1% 1/8W	EMR	605-09-24901
R 20	1	605-09-12401	625	RES. 12.4K 1% 1/8W	EMR	605-09-12401
R 21	1	605-09-12401	625	RES. 12.4K 1% 1/8W	EMR	605-09-12401
R 22	1	605-09-12701	625	RES. 12.7K 1% 1/8W	EMR	605-09-12701
R 23	1	605-09-49900	625	RES. 4.99K 1% 1/8W	EMR	605-09-49900
R 24	1	605-09-24900	625	RES. 2.49K 1% 1/8W	EMR	605-09-24900
R 25	1	605-09-12400	625	RES. 1.24K 1% 1/8W	EMR	605-09-12400
R 26	1	605-09-12400	625	RES. 1.24K 1% 1/8W	EMR	605-09-12400
R 27	1	605-09-12700	625	RES. 1.27K 1% 1/8W	EMR	605-09-12700
R 28	1	616-02-10009		RES,100 OHM 5% 1/4W	ALLEN BRAD	RC07GF101J
R 29	1	201-99-00134		POT,TRMR,1.0 K 10% .75W	BECK/MML27	79PR1K
R 30	1	616-02-51000		RES,5.1K 5% 1/4W	ALLEN BRAD	RC07GF512J
R 31	1	616-02-10003		RES,100 OHM 5% 1/4W	ALLEN BRAD	RC07GF101J
R 32	1	616-02-01009		RES,10 OHM 5% 1/4W	ALLEN BRAD	RC07GF100J
R 33	1	616-02-01009		RES,10 OHM 5% 1/4W	ALLEN BRAD	RC07GF100J
R 34	1	605-09-00000	625	RES,0T/VAR0 1% 1/8W		
R 35	1	616-02-10002		RES,100K 5% 1/4W	ALLEN BRAD	RC07GF104J
TP 1 THRU TP 3	3	143-98-00017		JACK,TEST PT,PW TYPE,RED	AMP INC.	3-582340-2
U 1	1	046-34-00014		IC,LIN VOLTAGE FOLLOWER	NSC/MML40	LM310H
U 2	1	046-34-00014		IC,LIN VOLTAGE FOLLOWER	NSC/MML40	LM310H
REF 1	1	905-01-00540	16655	SCHEMATIC,PWA	EMR	905-01-00540
REF 2	1	905-04-00002	9500-1	SPEC,COMPONENT SPACING	EMR	905-04-00002

FIRST USAGE MODEL 4142

EMR - TELEMETRY

PARTS LIST 16657-3 REV DATE 04/16/76 REV LTR E

LIST TITLE PWA,PCLE PAIR CHGE CONT NO. CODE IDENT SHT 1 OF 2
PART NO. 205-84-C0715 ECO RECORD 2 06141 CKD BY

ITEM NO.	QTY REQD	EMR NUMBER	DRAWING OR SPEC NO.	DESCRIPTION	VENDOR NAME	VENDOR PART NUMBER
1	1	204-99-C0506	16656	PWB,PCLE PAIR	EMR	204-99-C0506
2	2	293-99-C0010	6477-3	EJCTR,CAMD,.062BU,PCSNIO	EMR	259-99-C0010
3	2	183-98-00011		PAD,XSTR,TO-5 8PIN,.075H	MILTON ROSS	10191-DAP
C 1	1	707-01-49603	906	CAP.,.4.36MF 1% 50V	EMR	707-01-49603
C 2	1	707-01-34803	906	CAP.,.3.68MF 1% 50V	EMR	707-01-34803
C 3	1	707-01-49502	906	CAP.,.475MF 1% 50V	EMR	707-01-49502
C 4	1	707-01-34802	906	CAP.,.368MF 1% 50V	EMR	707-01-34802
C 5	1	707-01-49601	906	CAP.,.0496MF 1% 50V	EMR	707-01-49601
C 6	1	707-01-34801	906	CAP.,.0348MF 1% 50V	EMR	707-01-34801
C 7	1	305-20-47000	600	CAP. 4700PF 1% 500V	EMR	305-20-47000
C 8	1	305-20-33000	600	CAP. 3300PF 1% 500V	EMR	305-20-33000
C 9	1	304-20-36009	600	CAP. 360PF 1% 500V	EMR	304-20-36009
C 10	1	304-20-22009	600	CAP. 220PF 1% 500V	EMR	304-20-22009
C 11	1	707-01-15303	906	CAP.,.1.53MF 1% 50V	EMR	707-01-15303
C 12	1	707-01-99102	906	CAP.,.991MF 1% 50V	EMR	707-01-99102
C 13	1	707-01-15302	906	CAP.,.153MF 1% 50V	EMR	707-01-15302
C 14	1	707-01-98701	906	CAP.,.0987MF 1% 50V	EMR	707-01-98701
C 15	1	707-01-15301	906	CAP.,.0153MF 1% 50V	EMR	707-01-15301
C 16	1	707-01-97700	906	CAP.,.0097?MF 1% 50V	EMR	707-01-97700
C 17	1	305-20-15000	600	CAP. 1500PF 1% 500V	EMR	305-20-15000
C 18	1	304-41-82009	600	CAP. 820PF 1% 300V	EMR	304-41-82009
C 19	1	304-20-11009	600	CAP. 110PF 1% 500V	EMR	304-20-11009
C 20	1	304-13-05609	600	CAP. 56PF 1% 500V	EMR	304-13-05609
C 21	1	301-13-10007		CAP,CR , 50V .100 UF 20%	MRL 48	R131-C50-651-104M/MRL
C 23	1	301-13-10007		CAP,CR , 50V .100 UF 20%	MRL 48	R131-C50-651-104M/MRL
C 24	1	337-14-68003	601	CAP. 6.8MF 10% 35V	EMR	337-14-68003
C 25	1	301-13-10007		CAP,CR , 50V .100 UF 20%	MRL 48	R131-C50-651-104M/MRL
C 27	1	301-13-10007		CAP,CR , 50V .100 UF 20%	MRL 48	R131-C50-651-104M/MRL
C 28	1	337-14-68003	601	CAP. 6.8MF 10% 35V	EMR	337-14-68003
C 29	1	337-14-68003	601	CAP. 6.8MF 10% 35V	EMR	337-14-68003
C 30	1	304-20-16009	600	CAP. 160PF 1% 500V	EMR	304-20-16009
C 31	1	304-13-08209	600	CAP. 82PF 1% 500V	EMR	304-13-08209
C 32	1	304-20-12009	600	CAP. 120PF 1% 500V	EMR	304-20-12009
C 34	1	304-13-06809	600	CAP. 68PF 1% 500V	EMR	304-13-06809
C 35 THRU C 37	4	304-CC-CCC00	600	CAP.,T/VAR*		
CR 1 THRU CR 19	19	084-10-41480		DIODE,SW,75V/50UA,4NS/10MA	JEDEC	1N4148
K 1 THRU K 9	9	219-99-00028	28531-21	RELAY,2 FORM A,GOLD CONT	EMR	219-99-00028
K 10 THRU K 14	5	219-99-00023	28531-16	RELAY,4 FORM A,RHOD CONT	EMR	219-99-00023

FIRST USAGE MODEL 4142

ITEM NO.	QTY REQD	E M R NUMBER	DRAWING OR SPEC NO.	DESCRIPTION	VENDOR NAME	VENDOR PART NUMBER
K 15	1	219-99-00019	28531-12	RELAY,2 FORM C,GOLD CONT	EMR	219-99-00019
R 1	1	605-C9-10002	625	RES. 100K 1% 1/8W	EMR	605-C9-10002
R 2	1	605-C9-49901	625	RES. 49.9K 1% 1/8W	EMR	605-09-49901
R 3	1	605-09-24901	625	RES. 24.9K 1% 1/8W	EMR	605-09-24901
R 4	1	605-C9-12401	625	RES. 12.4K 1% 1/8W	EMR	605-09-12401
R 5	1	605-C9-12401	625	RES. 12.4K 1% 1/8W	EMR	605-C9-12401
R 6	1	605-09-12701	625	RES. 12.7K 1% 1/8W	EMR	605-09-12701
R 7	1	605-09-49900	625	RES. 4.99K 1% 1/8W	EMR	605-09-49900
R 8	1	605-C9-24900	625	RES. 2.49K 1% 1/8W	EMR	605-09-24900
R 9	1	605-09-12400	625	RES. 1.24K 1% 1/8W	EMR	605-09-12400
R 10	1	605-C9-12400	625	RES. 1.24K 1% 1/8W	EMR	605-09-12400
R 11	1	605-C9-12700	625	RES. 1.27K 1% 1/8W	EMR	605-C9-12700
R 12	1	616-02-01009		RES,10 OHM 5% 1/4W	ALLEN BRAD	RC07GF100J
R 13	1	616-02-10009		RES,100 OHM 5% 1/4W	ALLEN BRAD	RC07GF101J
R 15	1	616-02-51000		RES,5.1K 5% 1/4W	ALLEN BRAD	RC07GF512J
R 16	1	616-02-10009		RES,100 OHM 5% 1/4W	ALLEN BRAD	RC07GF101J
R 17	1	605-09-10002	625	RES. 100K 1% 1/8W	EMR	605-09-10002
R 18	1	605-09-49901	625	RES. 49.9K 1% 1/8W	EMR	605-09-49901
R 19	1	605-09-24901	625	RES. 24.9K 1% 1/8W	EMR	605-09-24901
R 20	1	605-09-12401	625	RES. 12.4K 1% 1/8W	EMR	605-09-12401
R 21	1	605-09-12401	625	RES. 12.4K 1% 1/8W	EMR	605-09-12401
R 22	1	605-09-12701	625	RES. 12.7K 1% 1/8W	EMR	605-09-12701
R 23	1	605-09-49900	625	RES. 4.99K 1% 1/8W	EMR	605-09-49900
R 24	1	605-09-24900	625	RES. 2.49K 1% 1/8W	EMR	605-09-24900
R 25	1	605-09-12400	625	RES. 1.24K 1% 1/8W	EMR	605-09-12400
R 26	1	605-09-12400	625	RES. 1.24K 1% 1/8W	EMR	605-09-12400
R 27	1	605-09-12700	625	RES. 1.27K 1% 1/8W	EMR	605-09-12700
R 28	1	616-02-10009		RES,100 OHM 5% 1/4W	ALLEN BRAD	RC07GF101J
R 29	1	201-98-C0139		POT,TRMR,1.0 K 100.75W	BECK/MML27	79P41K
R 30	1	616-02-51000		RES,5.1K 5% 1/4W	ALLEN BRAD	RC07GF512J
R 31	1	616-02-10009		RES,100 OHM 5% 1/4W	ALLEN BRAD	RC07GF101J
R 32	1	616-02-C1C09		RES,10 OHM 5% 1/4W	ALLEN BRAD	RC07GF100J
R 33	1	616-02-01009		RES,10 OHM 5% 1/4W	ALLEN BRAD	RC07GF100J
R 34	1	605-09-C0000	625	RES,0/JUMP 1% 1/8W		
R 35	1	616-02-10002		RES,100K 5% 1/4W	ALLEN BRAD	RC07GF104J
TP 1 THRU TP 3	3	143-98-C0017		JACK,TEST PT,PW TYPE,RED	AMP INC.	1-582340-2
U 1	1	046-34-C0014		IC,LIN VOLTAGE FOLLOWER	NSC/MML40	LM310M
U 2	1	046-34-00014		IC,LIN VOLTAGE FOLLOWER	NSC/MML40	LM310M
REF 1	1	905-01-C0540	16695	SCHEMATIC,PWA	EMR	905-01-C0540
REF 2	1	905-04-C0002	9500-1	SPEC,COMPONENT SPACING	EMR	905-04-C0002

FIRST USAGE MODEL 4142

EMR - TELEMETRY

PARTS LIST 14657-4 REV DATE 04/16/76 REV LTR D

LIST TITLE PWA,POLE PAIR CHGE CONT NO. CODE IDENT SHT 1 OF 2
PART NO. 205-89-C0716 ECO RECORD 2 06141 CKD BY

ITEM NO.	QTY REQD	EMR NUMBER	DRAWING OR SPEC NO.	DESCRIPTION	VENDOR NAME	VENDOR PART NUMBER
1	1	204-99-00506	16656	PWB,POLE PAIR	EMR	204-99-00506
2	2	299-99-00011	6477-10	EJCTR,CAMD,.062BD,PCSNIL	EMR	299-99-00011
3	2	183-98-00011		PAD,XSTR,TO-5 RPIN,.075M	MILTON ROSS	10193-DAP
C 1	1	707-01-34203	904	CAP.,1.42MF 1% 50V	EMR	707-01-34203
C 2	1	707-01-26403	904	CAP.,2.64MF 1% 50V	EMR	707-01-26403
C 3	1	707-01-34202	904	CAP.,.342MF 1% 50V	EMR	707-01-34202
C 4	1	707-01-26402	904	CAP.,.264MF 1% 50V	EMR	707-01-26402
C 5	1	707-01-34201	904	CAP.,.0342MF 1% 50V	EMR	707-01-34201
C 6	1	707-01-26401	904	CAP.,.0264MF 1% 50V	EMR	707-01-26401
C 7	1	305-20-33000	600	CAP. 3300PF 1% 500V	EMR	305-20-33000
C 8	1	305-20-22000	600	CAP. 2200PF 1% 500V	EMR	305-20-22000
C 9	1	304-20-22009	600	CAP. 220PF 1% 500V	EMR	304-20-22009
C 10	1	304-20-15009	600	CAP. 150PF 1% 500V	EMR	304-20-15009
C 11	1	707-01-22203	904	CAP.,2.22MF 1% 50V	EMR	707-01-22203
C 12	1	707-01-11503	904	CAP.,1.15MF 1% 50V	EMR	707-01-11503
C 13	1	707-01-22202	904	CAP.,.222MF 1% 50V	EMR	707-01-22202
C 14	1	707-01-11502	904	CAP.,.115MF 1% 50V	EMR	707-01-11502
C 15	1	707-01-22201	904	CAP.,.0222MF 1% 50V	EMR	707-01-22201
C 16	1	707-01-11501	904	CAP.,.0115MF 1% 50V	EMR	707-01-11501
C 17	1	305-20-22000	600	CAP. 2200PF 1% 500V	EMR	305-20-22000
C 18	1	305-20-10000	600	CAP.,1000PF 1% NON-SID	EMR	305-20-10000
C 19	1	304-20-20009	600	CAP. 200PF 1% 500V	EMR	304-20-20009
C 20	1	304-13-08209	600	CAP. 82MF 1% 500V	EMR	304-13-08209
C 21	1	301-13-10002		CAP,CR , 50V .100 UF 20%	MRL 48	8131-050-651-104M/MRL
C 23	1	301-13-10002		CAP,CR , 50V .100 UF 20%	MRL 48	8131-050-651-104M/MRL
C 24	1	337-14-68003	601	CAP. 6.8MF 10% 35V	EMR	337-14-68003
C 25	1	301-13-10002		CAP,CR , 50V .100 UF 20%	MRL 48	8131-050-651-104M/MRL
C 27	1	301-13-10002		CAP,CR , 50V .100 UF 20%	MRL 48	8131-050-651-104M/MRL
C 28	1	337-14-68003	601	CAP. 6.8MF 10% 35V	EMR	337-14-68003
C 29	1	337-14-68003	601	CAP. 6.8MF 10% 35V	EMR	337-14-68003
C 30	1	304-00-00000	600	CAP.,*E/VAR*		
C 31	1	304-20-33009	600	CAP. 330PF 1% 500V	EMR	304-20-33009
C 32	1	304-13-06809	600	CAP. 6MF 1% 500V	EMR	304-13-06809
C 33	1	304-13-05009	600	CAP. 50PF 1% 500V	EMR	304-13-05009
C 34 THRU C 37	4	304-00-00000	600	CAP.*E/VAR*		
CR 1 THRU CR 19	19	048-10-41480		DIODE,SI,75V,5UA,4NS/10MA	JEDEC	1N4148
K 1 THRU K 9	9	219-99-00028	28511-21	RELAY,2 FORM A,GOLD CONT	EMR	219-99-00028
K 10 THRU K 14	5	219-99-00021	28511-16	RELAY,4 FORM A,RHOD CONT	EMR	219-99-00021

FIRST USAGE MODEL 4142

205-89-00716 16657-4 SHT 2 OF 2

ITEM NO.	QTY REQD	E M R NUMBER	DRAWING OR SPEC NO.	DESCRIPTION	VENDOR NAME	VENDOR PART NUMBER
K 15	1	219-99-00019	28511-12	RELAY,2 FORM C,GOLD CONT	EMR	219-99-00019
R 1	1	605-09-10002	625	RES. 100K 1% 1/8W	EMR	605-09-10002
R 2	1	605-09-49901	625	RES. 49.9K 1% 1/8W	EMR	605-09-49901
R 3	1	605-09-24901	625	RES. 24.9K 1% 1/8W	EMR	605-09-24901
R 4	1	605-09-12401	625	RES. 12.4K 1% 1/8W	EMR	605-09-12401
R 5	1	605-09-12401	625	RES. 12.4K 1% 1/8W	EMR	605-09-12401
R 6	1	605-09-12701	625	RES. 12.7K 1% 1/8W	EMR	605-09-12701
R 7	1	605-09-49900	625	RES. 4.99K 1% 1/8W	EMR	605-09-49900
R 8	1	605-09-24900	625	RES. 2.49K 1% 1/8W	EMR	605-09-24900
R 9	1	605-09-12400	625	RES. 1.24K 1% 1/8W	EMR	605-09-12400
R 10	1	605-09-12400	625	RES. 1.24K 1% 1/8W	EMR	605-09-12400
R 11	1	605-09-12700	625	RES. 1.27K 1% 1/8W	EMR	605-09-12700
R 12	1	616-02-01009		RES,10 OHM 5% 1/4W	ALLEN BRAD	RC07GF100J
R 13	1	616-02-10009		RES,100 OHM 5% 1/4W	ALLEN BRAD	RC07GF101J
R 15	1	616-02-51000		RES,5.1K 5% 1/4W	ALLEN BRAD	RC07GF512J
R 16	1	616-02-10009		RES,100 OHM 5% 1/4W	ALLEN BRAD	RC07GF101J
R 17	1	605-09-10002	625	RES. 100K 1% 1/8W	EMR	605-09-10002
R 18	1	605-09-49901	625	RES. 49.9K 1% 1/8W	EMR	605-09-49901
R 19	1	605-09-24901	625	RES. 24.9K 1% 1/8W	EMR	605-09-24901
R 20	1	605-09-12401	625	RES. 12.4K 1% 1/8W	EMR	605-09-12401
R 21	1	605-09-12401	625	RES. 12.4K 1% 1/8W	EMR	605-09-12401
R 22	1	605-09-12701	625	RES. 12.7K 1% 1/8W	EMR	605-09-12701
R 23	1	605-09-49900	625	RES. 4.99K 1% 1/8W	EMR	605-09-49900
R 24	1	605-09-24900	625	RES. 2.49K 1% 1/8W	EMR	605-09-24900
R 25	1	605-09-12400	625	RES. 1.24K 1% 1/8W	EMR	605-09-12400
R 26	1	605-09-12400	625	RES. 1.24K 1% 1/8W	EMR	605-09-12400
R 27	1	605-09-12700	625	RES. 1.27K 1% 1/8W	EMR	605-09-12700
R 28	1	616-02-10009		RES,100 OHM 5% 1/4W	ALLEN BRAD	RC07GF101J
R 29	1	201-98-00139		PCT,TRMR,1.0 K 10%.75W	BECK/MML27	7SPR1K
R 30	1	616-02-51000		RES,5.1K 5% 1/4W	ALLEN BRAD	RC07GF512J
R 31	1	616-02-10009		RES,100 OHM 5% 1/4W	ALLEN BRAD	RC07GF101J
R 32	1	616-02-01009		RES,10 OHM 5% 1/4W	ALLEN BRAD	RC07GF100J
R 33	1	616-02-01009		RES,10 OHM 5% 1/4W	ALLEN BRAD	RC07GF100J
R 34	1	605-09-00000	625	RES,*T/VAR* 1% 1/8W		
R 35	1	616-02-10002		RES,100K 5% 1/4W	ALLEN BRAD	RC07GF104J
TP 1 THRU TP 3	3	143-98-00017		JACK,TEST PT,PW TYPE,RED	AMP INC.	3-582340-2
U 1	1	046-34-00014		IC,LIN VOLTAGE FOLLOWER	NSC/MML40	LM310H
U 2	1	046-34-00014		IC,LIN VOLTAGE FOLLOWER	NSC/MML40	LM310H
REF 1	1	905-01-00540	16655	SCHEMATIC,PWA	EMR	905-01-00540
REF 2	1	905-04-00002	9500-1	SPEC,COMPONENT SPACING	EMR	905-04-00002

FIRST USAGE MODEL 4142

EMR - TELEMETRY

PARTS LIST 16657-5 REV DATE 04/16/76 REV LTR D

LIST TITLE PWA,POLE PAIR CHGE CONT NO. CODE IDENT SHT 1 OF 2
PART NO. 205-89-00717 ECO RECORD 2 06161 CRD BY

ITEM NO.	QTY REQD	EMR NUMBER	DRAWING OR SPEC NO.	DESCRIPTION	VENDO. NAME	VENDOR PART NUMBER
1	1	204-99-60506	16656	PWB,POLE PAIR	EMR	204-99-60506
2	2	259-99-00012	6477-11	EJCTR,CARD,.062BD,PCSN12	EMR	259-99-00012
3	2	180-98-00011		PAD,RSTK,10-5 8PIN,.075H	MILFOM ROSS	10193-DAP
C 1	1	707-01-12203	904	CAP.,1.22MF 1% 50V	EMR	707-01-12203
C 2	1	707-01-13803	904	CAP.,1.34MF 1% 50V	EMR	707-01-13803
C 3	1	707-01-12202	904	CAP.,.122MF 1% 50V	EMR	707-01-12202
C 4	1	707-01-13802	904	CAP.,.134MF 1% 50V	EMR	707-01-13802
C 5	1	707-01-12201	904	CAP.,.0122MF 1% 50V	EMR	707-01-12201
C 6	1	707-01-13801	904	CAP.,.0134MF 1% 50V	EMR	707-01-13801
C 7	1	305-20-10000	600	CAP.,1000PF 1% NON-STD	EMR	305-20-10000
C 8	1	305-20-12000	600	CAP. 1200PF 1% 500V	EMR	305-20-12000
C 9	1	304-00-00000	600	CAP.,*T/VAR*		
C 10	1	304-08-03309	600	CAP. 33PF .5PF 500V	EMR	304-08-03309
C 11	1	707-01-62003	904	CAP.,6.20MF 1% 50V	EMR	707-01-62003
C 12	1	707-01-17403	904	CAP.,1.74MF 1% 50V	EMR	707-01-17403
C 13	1	707-01-62002	904	CAP.,.620MF 1% 50V	EMR	707-01-62002
C 14	1	707-01-17402	904	CAP.,.174MF 1% 50V	EMR	707-01-17402
C 15	1	707-01-62001	904	CAP.,.0620MF 1% 50V	EMR	707-01-62001
C 16	1	707-01-17401	904	CAP.,.0174MF 1% 50V	EMR	707-01-17401
C 17	1	305-41-62000	600	CAP.,6200PF 1% 300V	EMR	305-41-62000
C 18	1	305-20-18000	600	CAP. 1800PF 1% 500V	EMR	305-20-18000
C 19	1	305-20-12000	600	CAP. 1200PF 1% 500V	EMR	305-20-12000
C 20	1	304-20-22009	600	CAP. 220PF 1% 500V	EMR	304-20-22009
C 21	1	301-13-10002		CAP,CM , 50V .100 UF 20%	MRL 48	M131-050-651-104M/MRL
C 23	1	301-13-10002		CAP,CM , 50V .100 UF 20%	MRL 48	M131-050-651-104M/MRL
C 24	1	337-14-68003	601	CAP. 6.8MF 10% 35V	EMR	337-14-68003
C 25	1	301-13-10002		CAP,CM , 50V .100 UF 20%	MRL 48	M131-050-651-104M/MRL
C 27	1	301-13-10002		CAP,CM , 50V .100 UF 20%	MRL 48	M131-050-651-104M/MRL
C 28	1	337-14-68003	601	CAP. 6.8MF 10% 35V	EMR	337-14-68003
C 29	1	337-14-68003	601	CAP. 6.8MF 10% 35V	EMR	337-14-68003
C 30	1	304-20-10009	600	CAP. 100PF 1% 500V	EMR	304-20-10009
C 31	1	304-13-08209	600	CAP. 82PF 1% 500V	EMR	304-13-08209
C 32	1	304-20-39009	600	CAP. 390PF 1% 500V	EMR	304-20-39009
C 33	1	304-08-03009	600	CAP. 30PF .5PF 500V	EMR	304-08-03009
C 34 THRU C 37	4	304-00-00000	600	CAP.,*T/VAR*		
CR 1 THRU CR 18	18	084-10-41480		DIODE,SW,75V/50UA,4NS/10MA	JEDEC	1N4148
K 1 THRU K 9	9	219-99-00028	29531-21	RELAY,2 FORM A,GLD CONT	EMR	219-99-00028
K 10 THRU K 14	5	219-99-00023	28531-16	RELAY,4 FORM A,RHOD CONT	EMR	219-99-00023

FIRST USAGE MODEL 4142

205-89-00717 16657-5 SHT 2 OF 2

ITEM NO.	QTY REQD	E M R NUMBER	DRAWING OR SPEC NO.	DESCRIPTION	VENDOR NAME	VENDOR PART NUMBER
K 15	1	219-99-00019	28531-12	RELAY,2 FORM C,GOLD CONT	EMR	219-99-00019
R 1	1	605-09-10002	625	RES. 100K 1% 1/8W	EMR	605-09-10002
R 2	1	605-09-49901	625	RES. 49.9K 1% 1/8W	EMR	605-09-49901
R 3	1	605-09-24901	625	RES. 24.9K 1% 1/8W	EMR	605-09-24901
R 4	1	605-09-12401	625	RES. 12.4K 1% 1/8W	EMR	605-09-12401
R 5	1	605-09-12401	625	RES. 12.4K 1% 1/8W	EMR	605-09-12401
R 6	1	605-09-12701	625	RES. 12.7K 1% 1/8W	EMR	605-09-12701
R 7	1	605-09-49900	625	RES. 4.99K 1% 1/8W	EMR	605-09-49900
R 8	1	605-09-24900	625	RES. 2.49K 1% 1/8W	EMR	605-09-24900
R 9	1	605-09-12400	625	RES. 1.24K 1% 1/8W	EMR	605-09-12400
R 10	1	605-09-12400	625	RES. 1.24K 1% 1/8W	EMR	605-09-12400
R 11	1	605-09-12700	625	RES. 1.27K 1% 1/8W	EMR	605-09-12700
R 12	1	616-02-01009		RES,10 OHM 5% 1/4W	ALLEN BRAD	RC07GF100J
R 13	1	616-02-10009		RES,100 OHM 5% 1/4W	ALLEN BRAD	RC07GF101J
R 15	1	616-02-51000		RES,5.1K 5% 1/4W	ALLEN BRAD	RC07GF512J
R 16	1	616-02-10009		RES,100 OHM 5% 1/4W	ALLEN BRAD	RC07GF101J
R 17	1	605-09-10002	625	RES. 100K 1% 1/8W	EMR	605-09-10002
R 18	1	605-09-49901	625	RES. 49.9K 1% 1/8W	EMR	605-09-49901
R 19	1	605-09-24901	625	RES. 24.9K 1% 1/8W	EMR	605-09-24901
R 20	1	605-09-12401	625	RES. 12.4K 1% 1/8W	EMR	605-09-12401
R 21	1	605-09-12401	625	RES. 12.4K 1% 1/8W	EMR	605-09-12401
R 22	1	605-09-12701	625	RES. 12.7K 1% 1/8W	EMR	605-09-12701
R 23	1	605-09-49900	625	RES. 4.99K 1% 1/8W	EMR	605-09-49900
R 24	1	605-09-24900	625	RES. 2.49K 1% 1/8W	EMR	605-09-24900
R 25	1	605-09-12400	625	RES. 1.24K 1% 1/8W	EMR	605-09-12400
R 26	1	605-09-12400	625	RES. 1.24K 1% 1/8W	EMR	605-09-12400
R 27	1	605-09-12700	625	RES. 1.27K 1% 1/8W	EMR	605-09-12700
R 28	1	616-02-10009		RES,100 OHM 5% 1/4W	ALLEN BRAD	RC07GF101J
R 29	1	201-98-00138		POT,TRMR,1.0 K 10%,75W	BLCK/MML27	75PR1K
R 30	1	616-02-51000		RES,5.1K 5% 1/4W	ALLEN BRAD	RC07GF512J
R 31	1	616-02-10009		RES,100 OHM 5% 1/4W	ALLEN BRAD	RC07GF101J
R 32	1	616-02-01009		RES,10 OHM 5% 1/4W	ALLEN BRAD	RC07GF100J
R 33	1	616-02-01009		RES,10 OHM 5% 1/4W	ALLEN BRAD	RC07GF100J
R 34	1	605-09-00000	625	RES,*T/VAR* 1% 1/8W		
R 35	1	616-02-10002		RES,100K 5% 1/4W	ALLEN BRAD	RC07GF104J
TP 1 THRU TP 3	3	143-98-00017		JACK,TEST PT,PW TYPE,RED	AMP INC.	3-582340-2
U 1	1	046-34-00014		IC,LIN VOLTAGE FOLLOWER	NSC/MML40	LM310H
U 2	1	046-34-00014		IC,LIN VOLTAGE FOLLOWER	NSC/MML40	LM310H
REF 1	1	905-01-00540	16655	SCHEMATIC,PWA	EMR	905-01-00540
REF 2	1	905-04-00002	9500-1	SPEC,COMPONENT SPACING	EMR	905-04-00002

FIRST USAGE MODEL 4142

A15

EMR - TELEMETRY

PARTS LIST 17397 REV DATE 08/02/76 REV LTR H

LIST TITLE PWA,REGLTR & OUTPUT AMPL CNGE CONT NO. CODE IDENT SHT 1 OF 4
PART NO. 205-89-00720 ECO 53627 06141 CKD BY

ITEM NO.	QTY REQD	EMR NUMBER	DRAWING OR SPEC NO.	DESCRIPTION	VENDOR NAME	VENDOR PART NUMBER
1	1	204-99-00507	17398	PWA,REGULATOR & OUTPUT AM	EMR	204-99-00507
2	1	298-99-00013	15816	MISC	EMR	298-99-00013
3	AR	C60-21-00001		CMPD,DIELECTRIC GEL	DOW CORNING	DOW CORNING 3
4	2	287-02-00002		NUT,HEX, 4-40	PKCMT OPTION	MS35649-244
5	2	229-02-00076		SCREW,4-40X7/16 PAN HD	PKCMT OPTION	MS51957-16
6	4	189-99-00001	800-1	PAD,XSTR TO-5,9 OR 11,6 P	EMR	189-99-00001
7	21	189-98-00004		PAD,XSTR 4 PIN*USE OPTL*	DEL BLIAN	1CC-C00-NY
8	2	299-99-00015	6477-14	EJCTR,CARD,.062BD,PCSNIS	EMR	299-99-00015
9	1	189-99-00002	800-2	PAD,XSTR TO-5 6 PIN,.075	EMR	189-99-00002
10	3	C40-98-00010		CLIP,THERMAL EQUALIZING	WAKEFIELD	259-1B-2S
11	1	238-98-00004		MISC,FOR TO-5 PKG	IERC	IRBF-032-025B
C 1	1	304-01-01009	600	CAP. 10PF .5PF 500V	EMR	304-01-01009
C 2	1	339-14-47004	601	CAP.. 47PF 10% 35V	EMR	339-14-47004
C 3	1	338-13-47004	601	CAP.. 47PF 10% 20V	EMR	338-13-47004
C 4	1	301-13-10002		CAP,CR , 50V .100 UF 20%	MRL 48	8131-050-651-104M/MRL
C 5	1	304-01-01009	600	CAP. 10PF .5PF 500V	EMR	304-01-01009
C 6	1	301-13-10002		CAP,CR , 50V .100 UF 20%	MRL 48	8131-050-651-104M/MRL
C 7	1	337-14-68003	601	CAP. 6.8PF 10% 35V	EMR	337-14-68003
C 8	1	339-14-47004	601	CAP.. 47PF 10% 35V	EMR	339-14-47004
C 9	1	301-13-10002		CAP,CR , 50V .100 UF 20%	MRL 48	8131-050-651-104M/MRL
C 10	1	304-62-10000	600	CAP. 1000PF 1% 100V	EMR	304-62-10000
C 12	1	301-13-10002		CAP,CR , 50V .100 UF 20%	MRL 48	8131-050-651-104M/MRL
C 13	1	301-13-10002		CAP,CR , 50V .100 UF 20%	MRL 48	8131-050-651-104M/MRL
C 14	1	337-14-68003	601	CAP. 6.8PF 10% 35V	EMR	337-14-68003
C 15	1	339-14-47004	601	CAP.. 47PF 10% 35V	EMR	339-14-47004
C 16	1	338-13-47004	601	CAP.. 47PF 10% 20V	EMR	338-13-47004
C 17	1	301-13-10002		CAP,CR , 50V .100 UF 20%	MRL 48	8131-050-651-104M/MRL
C 18	1	301-13-10002		CAP,CR , 50V .100 UF 20%	MRL 48	8131-050-651-104M/MRL
C 19	1	304-13-06809	600	CAP. 68PF 1% 500V	EMR	304-13-06809
C 20	1	338-13-47004	601	CAP.. 47PF 10% 20V	EMR	338-13-47004
C 21	3	301-13-10002		CAP,CR , 50V .100 UF 20%	MRL 48	8131-050-651-104M/MRL
THRU						
C 23						
C 24	1	304-01-01009	600	CAP. 10PF .5PF 500V	EMR	304-01-01009
C 25	4	301-13-10002		CAP,CR , 50V .100 UF 20%	MRL 48	8131-050-651-104M/MRL
THRU						
C 28						
CR 1	1	088-10-40020		DIODE,RECTIFIER 100V,1A,1	JEDEC	1N4002
CR 2	1	088-10-41480		DIODE,SW,75V/50UA,4NS/10MA	JEDEC	1N4148
CR 3	1	088-10-03381		DIODE,REF,3V/7.5MA,.001 %	JEDEC	1N938/1N938A/1N938B
CR 4	1	C88-99-00339	642-03	DIODE,ZENER 0.4W 4.3V	EMR	088-99-00339
CR 5	1	088-10-40020		DIODE,RECTIFIER 100V,1A,1	JEDEC	1N4002
CR 6	1	088-19-00029	23200	DIO,4 PELLET 200V VF 2.47V	EMR	088-19-00029
CR 7	4	088-10-41480		DIODE,SW,75V/50UA,4NS/10MA	JEDEC	1N4148
THRU						
CR 10						

FIRST USAGE MODEL 4142

ITEM NO.	QTY REQD	E M R NUMBER	DRAWING OR SPEC NO.	DESCRIPTION	VENDOR NAME	VENDOR PART NUMBER
CR 11	1	088-99-00339	642-01	DIODE,ZENER 0.4W 4.3V	EMR	088-99-00339
CR 12	1	088-10-40020		DIODE,RECTIFIER 100V,1A,I	JEDEC	1N4002
CR 13	1	088-10-40020		DIODE,RECTIFIER 100V,1A,I	JEDEC	1N4002
CR 14 THRU CR 16	3	088-10-41480		DIODE,SW,75V/50UA,4NS/10MA	JEDEC	1N4148
K 1	1	219-99-00019	28531-12	RELAY,2 FORM C,GOLD CONT	EMR	219-99-00019
K 2	1	219-98-00051		RELAY,1C GOLD CONT,26V	MATHAWAY	65627-7/GP-1C-26FCD
L 1	1	055-89-00001	356-1106	L,ASSY	EMR	055-89-00001
Q 1	1	263-10-40370		XSTR,PNP 60V 1A,HFE 15	JEDEC	2N4037
Q 2	1	263-84-00019		XSTR,PNP PR 2N3251 MATCH	MATCHED,AGED	805-4,3628
Q 3	1	263-99-00089	666	XSTR,NPN DIFF AMPL,VCB 50	EMR	263-99-00089
Q 4	1	263-84-00019		XSTR,PNP PR 2N3251 MATCH	MATCHED,AGED	805-4,3628
Q 5	1	263-35-00019		XSTR,NPN,MAT.PR,VBE1-VBE2	AMPEREX	A6427S
Q 6	1	263-10-39470		XSTR,NPN 40V SW-AMPL,HFE	JEDEC	2N3947
Q 7	1	263-97-00033		XSTR,PNP,SWITCH/AMPL,50V	MML 4	2N3251/2N3251A
Q 8	1	263-10-39470		XSTR,NPN 40V SW-AMPL,HFE	JEDEC	2N3947
Q 9	1	263-10-49180		XSTR SW-AMP 40V 1A 30W	JEDEC	2N4918
Q 10	1	263-10-49210		XSTR SW-AMP 40V 1A 30W	JEDEC	2N4921
Q 11	1	263-10-30530		XSTR,NPN SW-AMPL 5W 40V	JEDEC	2N3C53
Q 12	1	263-35-00019		XSTR,NPN,MAT.PR,VBE1-VBE2	AMPEREX	A6427S
Q 13	1	263-10-39470		XSTR,NPN 40V SW-AMPL,HFE	JEDEC	2N3947
Q 14	1	263-97-00033		XSTR,PNP,SWITCH/AMPL,50V	MML 4	2N3251/2N3251A
Q 15	1	263-10-49180		XSTR SW-AMP 40V 1A 30W	JEDEC	2N4918
Q 16	1	263-10-49210		XSTR SW-AMP 40V 1A 30W	JEDEC	2N4921
Q 17	1	263-10-40370		XSTR,PNP 60V 1A,HFE 15	JEDEC	2N4037
Q 18	1	263-97-00033		XSTR,PNP,SWITCH/AMPL,50V	MML 4	2N3251/2N3251A
Q 19	1	263-97-00093		XSTR,PNP,SWITCH/AMPL,50V	MML 4	2N3251/2N3251A
Q 20	1	263-10-39470		XSTR,NPN 40V SW-AMPL,HFE	JEDEC	2N3947
Q 21	1	263-10-39470		XSTR,NPN 40V SW-AMPL,HFE	JEDEC	2N3947
Q 22	1	263-10-40370		XSTR,PNP 60V 1A,HFE 15	JEDEC	2N4037
Q 23	1	263-97-00033		XSTR,PNP,SWITCH/AMPL,50V	MML 4	2N3251/2N3251A
Q 24	1	263-97-00093		XSTR,PNP,SWITCH/AMPL,50V	MML 4	2N3251/2N3251A
Q 25	1	263-10-39470		XSTR,NPN 40V SW-AMPL,HFE	JEDEC	2N3947
Q 26	1	263-10-39470		XSTR,NPN 40V SW-AMPL,HFE	JEDEC	2N3947
R 1	1	616-02-51000		RES,5.1K 5% 1/4W	ALLEN BRAD	RC07GF512J
R 2	1	616-02-15001		RES,15K 5% 1/4W	ALLEN BRAD	RC07GF153J
R 3	1	616-02-10009		RES,100 OHM 5% 1/4W	ALLEN BRAD	RC07GF101J
R 4	1	616-02-10009		RES,100 OHM 5% 1/4W	ALLEN BRAD	RC07GF101J
R 5	1	616-02-68000		RES,6.8K 5% 1/4W	ALLEN BRAD	RC07GF682J
R 6	1	616-02-15000		RES,1.5K 5% 1/4W	ALLEN BRAD	RC07GF152J
R 7	1	605-09-20000	625	RES. 2.0K 1% 1/8W	EMR	605-09-20000
R 8	1	605-09-40200	625	RES. 4.02K 1% 1/8W	EMR	605-09-40200
R 9	1	605-09-61900	625	RES. 6.19K 1% 1/8W	EMR	605-09-61900
R 11	1	608-09-10001	624	RES. 10K 1% 1/10W	EMR	608-09-10001
R 12	1	616-02-10000		RES,1K 5% 1/4W	ALLEN BRAD	RC07GF102J
R 13	1	623-02-02409		RES, 24 OHM 5% 1W	ALLEN BRAD	RC32GF240J
R 14	1	616-02-75009		RES,750 OHM 5% 1/4W	ALLEN BRAD	RC07GF751J
R 15	1	616-02-47000		RES,4.7K 5% 1/4W	ALLEN BRAD	RC07GF472J

FIRST USAGE MODEL 4147

ITEM NO.	QTY REQD	E M R NUMBER	DRAWING OR SPEC NO.	DESCRIPTION	VENDOR NAME	VENDOR PART NUMBER
R 16	1	201-98-00062		POT,TRMR,200 OHM 10% .5W	BECK/RMRL27	62PR200
R 17	1	605-09-20000	625	RES. 2.0K 1% 1/8W	EMR	605-09-20000
R 18	1	201-98-00062		POT,TRMR,200 OHM 10% .5W	BECK/RMRL27	62PR200
R 19	1	608-09-10000	624	RES. 1K 1% 1/10W	EMR	608-09-10000
R 20	1	616-02-10000		RES,100 OHM 5% 1/4W	ALLEN BRAD	RC07GF101J
R 21	1	616-02-10000		RES,1K 5% 1/4W	ALLEN BRAD	RC07GF102J
R 22	1	616-02-18000		RES,1.8K 5% 1/4W	ALLEN BRAD	RC07GF182J
R 23	1	616-02-01009		RES,10 OHM 5% 1/4W	ALLEN BRAD	RC07GF100J
R 24	1	616-02-75009		RES,750 OHM 5% 1/4W	ALLEN BRAD	RC07GF751J
R 25	1	605-09-40200	625	RES. 4.02K 1% 1/8W	EMR	605-09-40200
R 26	1	605-09-18201	625	RES. 18.2K 1% 1/8W	EMR	605-09-18201
R 27	1	616-02-91000		RES,9.1K 5% 1/4W	ALLEN BRAD	RC07GF912J
R 28	1	616-02-10009		RES. 100 OHM 5% 1/4W	ALLEN BRAD	RC07GF301J
R 29	1	616-02-01009		RES,10 OHM 5% 1/4W	ALLEN BRAD	RC07GF100J
R 30	1	616-02-00279		RES, 2.7 OHM 5% 1/4W	ALLEN BRAD	RLC7GF2R7J
R 31	1	616-02-00279		RES, 2.7 OHM 5% 1/4W	ALLEN BRAD	RC07GF2R7J
R 32	1	616-02-51000		RES,5.1K 5% 1/4W	ALLEN BRAD	RC07GF512J
R 33	1	616-02-68000		RES,6.8K 5% 1/4W	ALLEN BRAD	RC07GF682J
R 34	1	616-02-10009		RES,100 OHM 5% 1/4W	ALLEN BRAD	RC07GF101J
R 35	1	616-02-10009		RES,100 OHM 5% 1/4W	ALLEN BRAD	RC07GF101J
R 36	1	605-09-10000	625	RES. 1K 1% 1/8W	EMR	605-09-10000
R 37	1	616-02-10000		RES,1K 5% 1/4W	ALLEN BRAD	RC07GF102J
R 38	1	616-02-18000		RES,1.8K 5% 1/4W	ALLEN BRAD	RC07GF182J
R 39	1	616-02-51000		RES,5.1K 5% 1/4W	ALLEN BRAD	RC07GF512J
R 40	1	616-02-05609		RES,56 OHM 5% 1/4W	ALLEN BRAD	RC07GF560J
R 41	1	616-02-05609		RES,56 OHM 5% 1/4W	ALLEN BRAD	RC07GF560J
R 42	1	616-02-10000		RES,1K 5% 1/4W	ALLEN BRAD	RC07GF102J
R 44	1	616-02-10000		RES,1K 5% 1/4W	ALLEN BRAD	RC07GF102J
R 45	1	623-02-02409		RES, 24 OHM 5% 1W	ALLEN BRAD	RC32GF240J
R 46	1	616-02-22009		RES,220 OHM 5% 1/4W	ALLEN BRAD	RC07GF221J
R 47	1	605-09-10100	625	RES. 1.01K 1% 1/8W	EMR	605-09-10100
R 48	1	616-02-33000		RES,3.3K 5% 1/4W	ALLEN BRAD	RLC7GF332J
R 49	1	605-09-15001	625	RES. 15K 1% 1/8W	EMR	605-09-15001
R 50	1	605-09-49900	625	RES. 4.99K 1% 1/4W	EMR	605-09-49900
R 51	1	616-02-01009		RES,10 OHM 5% 1/4W	ALLEN BRAD	RC07GF100J
R 52	1	201-98-00062		POT,TRMR,200 OHM 10% .5W	BECK/RMRL27	62PR200
R 53	1	605-09-90909	625	RES. 909 OHM 1% 1/8W	EMR	605-09-90909
R 54	1	605-09-10000	625	RES. 1K 1% 1/8W	EMR	605-09-10000
R 55	1	616-02-51000		RES,5.1K 5% 1/4W	ALLEN BRAD	RC07GF512J
R 56	1	616-02-10009		RES,100 OHM 5% 1/4W	ALLEN BRAD	RC07GF101J
R 57	1	616-02-10009		RES,100 OHM 5% 1/4W	ALLEN BRAD	RC07GF101J
R 58	1	616-02-75009		RES,750 OHM 5% 1/4W	ALLEN BRAD	RC07GF751J
R 59	1	605-09-38300	625	RES. 1.83K 1% 1/8W	EMR	605-09-38300
R 60	1	605-09-86609	625	RES. 866 OHM 1% 1/8W	EMR	605-09-86609
R 61	1	616-02-68000		RES,6.8K 5% 1/4W	ALLEN BRAD	RC07GF682J
R 62	1	605-09-54909	625	RES. 549 OHM 1% 1/8W	EMR	605-09-54909
R 63	1	605-09-93109	625	RES. 931 OHM 1% 1/8W	EMR	605-09-93109
R 64	1	616-02-01009		RES,10 OHM 5% 1/4W	ALLEN BRAD	RC07GF100J
R 65	1	201-98-00165		POT,TRMR,1.0 MEG 20% .5W	BECK/RMRL27	62PR1MEG

FIRST USAGE MODEL 4142

ITEM NO.	QTY REQD	E M R NUMBER	DRAWING OR SPEC NO.	DESCRIPTION	VENDOR NAME	VENDOR PART NUMBER
R 66	1	616-02-10003		RES.1 MEG 5% 1/4W	ALLEN BRAD	RC07GF105J
R 67	1	605-09-49909	625	RES. 499 OHM 1% 1/8W	EMM	6C5-09-49909
R 68	1	616-02-36000		RES.3.6K 5% 1/4W	ALLEN BRAD	RC07GF362J
R 69	1	616-02-36000		RES.3.6K 5% 1/4W	ALLEN BRAD	RC07GF362J
R 70	1	201-98-00089		POT,TRMR 2 K 10% 1W	MML 27	1810P-202
R 71	1	201-98-00146		POT,TRMR, 20 OHM 20% .5W	BECK/MML27	62PR20
R 72 THRU R 75	4	616-02-01509		RES.15 OHM 5% 1/4W	ALLEN BRAD	RC07GF150J
TP 1 THRU TP 8	8	143-98-00017		JACK,TEST PT,PW TYPE,RED	APP INC.	3-582340-2
Z 1	1	046-34-00020		IC,LIN AMPL,OPNL HS	MPL40	LM318H
REF 1	1	905-C1-00541	17397	SCHEMATIC,PWA,REG & OUPT	EMM	9C5-C1-00541
REF 2	1	9C5-04-00002	9500-1	SPEC,COMPONENT SPACING	EMM	9C5-04-00002

FIRST USAGE MODEL 4142

EMR - TELEMETRY

PARTS LIST 6245-11 REV DATE 01/26/73 REV LTR M

LIST TITLE PANEL,ASSY REAR CONNECTOR CNGE CONT NO. CODE IDENT SHT 1 OF 1
PART NO. 191-87-C0329 ECO 46359 06141 CKD BY

ITEM NO.	QTY REQD	EMR NUMBER	DRAWING OR SPEC NO.	DESCRIPTION	VENDOR NAME	VENDOR PART NUMBER
1	1	999-01-C0003	17685	PNL,ASSY,REAR CONN POAVAR		
2	1	063-98-00056		CONN,PLUG,52PIN,REP	AMPHENOL	220-1N052
4	3	072-98-00007		RSHG,NYLON,BNC CONNECTOR	MILTON RUSS	10221-N
5	3	063-C2-C0014		CONN,RCPT,AMU,BNC CCAR	QVL	UG-1094A/U
6	1	134-98-C0006		HLDR,FUSE,.AG,RTANG TERM	MMLTI	342C04-1
7	1	120-98-C0022		FUSE,SLO-BLO,1.5AMP,125V	LITTELFUSE	31301.5
8	1	599-01-C0004	17685	HLDWFR,PUA VAR		
10	1	063-99-C0021		CONN,RECP,3-WIRE	HUBBELL/AMEM	7486/7486
11	3	273-98-00016		WASHER,FL,FIBER,3/8SCREW	GEM CEMENT	6517
12	AR	273-07-CC00A		WASHER,#6, FLT ST STL	PRCMT OPTION	MS15795-805
13	AR	229-C2-CC084		SCREW,6-32X5/16 PAN HD	PRCMT OPTION	MS51957-27
14	AR	287-02-00003		NUT,HEX, 6-32	PRCMT OPTION	MS35649-264
15	AR	271-C2-00026		WASHER,#6,INT TOOTH	PRCMT OPTION	MS35333-71
16	4	227-C2-CC088		SCREW,6-32X5/8 PAN HD	PRCMT OPTION	MS51957-31
17	1	063-98-00063		CONN,RECP,52PIN,REP	AMPHENOL	220-2N052
18	1	063-98-00024		CONN,PLUG,3WIRE	HUBBELL/AMEM	7484/7484
19	1	063-C2-C0011		CONN,PLUG,BNC	QVL	UG-260/U
20	1	047-98-CC001		CLAMP,CABLE	AMPHENOL	220-5
21	1	25.-98-C0017		TERM,LUG,SOLDER,..37510	BIRNBACH	4
22	1	200-98-C0003		POST,BINDING,SWAY RED	SUPERM SMITH	GP3CNC/1835
23	1	200-98-CC001		POST,BINDING,SWAY BLK	SUPERM SMITH	DF3CBC/257-103
24	AR	264-98-00013		TUBING,.75010,SHRINK	ALPHA WIRE	FIT-105-3/4*BLACK*
25	52	065-98-C0002		CONT,MELTA-TAC,FEMALE	AMPHENOL	220-S02
26	52	065-99-C0035		CONT, MELTA-TAC, MALE	AMPHENOL	220-P02
27	1	255-58-CC013		TERM,LUG,#6,SOLDER	H H SMITH	1466
10	1	240-96-CC002	18667	BUTTON,PLUG MODIFIED	EMR	240-99-00002
31	1	075-99-CC080	11735	COVER	EMR	075-99-00080
33	1	273-99-C0047		WASHER,FINISH .016THK	SEASTROM	5600-40-16
34	1	255-98-C0002		TERM,LUG,SOLDER,#10SCREW	SHAKEPROOF	2560-10-01
C 1	1	301-23-47001		CAP,CR , 50V 2.7 UF 20%	RML 48	8141-050-651-275M/RML
REF 1	1	305-13-C0083	18484	WIRING,DIAGRAM,PANEL,REAR	EMR	9C5-13-C0083

FIRST USAGE MODEL 4142-01

EMR - TELEMETRY

PARTS LIST 14976-3 REV DATE 01/19/77 REV LTR D

LIST TITLE PS,ASSY CHGE CONT NO. CODE IDENT SHT 1 OF 1
PART NO. 202-89-00029 ECO RECORD 3 04141 CKD BY

ITEM NO.	QTY REQD	E M R NUMBER	DRAWING OR SPEC NO.	DESCRIPTION	VENDOR NAME	VENDOR PART NUMBER
1	1	042-89-00088	14139	CHAS,ASSY,WELDMENT	EMR	042-89-C0088
3	3	214-98-CC001		RECT,BRDG FW, 6.0A,100V	PRL58	MDA952-2/60FBIL
4	2	351-87-84006		CAP, 8400 UF -10+75% 40V	SPRAGUE	36D842G040BB2A
6	2	016-98-00029		BRKT,CAP MTG,2.00 IN NOM	SANGAMO	115058-05
7	1	016-98-00022		BRKT,CAP MTG,1.39 IN NOM	MML26	115058-C674586-97A
8	1	599-C1-CC001	17685	XFMR,POA VAR		
9	1	299-99-00014	14975	HTSK	EMR	298-99-C0014
12	AR	060-21-00002		CMPD,HEAT CONDUCTIVE CEL	DOW CORNING	DOW CORNING 340
14	1	353-83-92006		CAP,, 9200PF -10+75% 15V	SPRAGUE/PRL6	36D922G015AB2B
15	6	229-02-00079		SCREW,4-40X3/4 PAN HD	PRCMT OPTION	MS51957-19
16	10	229-02-00085		SCREW,6-32X3/8 PAN HD	PRCMT OPTION	MS51957-28
17	10	273-02-C0026		WASHER,#6,INT TCOTH	PRCMT OPTION	MS35333-71
18	10	267-C2-CC003		NUT,HEX, 6-32	PRCMT OPTION	MS35649-264
19	12	287-02-00002		NUT,HEX, 4-40	PRCMT OPTION	MS35649-244
20	8	229-02-CC077		SCREW,4-40X1/2 PAN HD	PRCMT OPTION	MS51957-17
21	18	273-C2-C0005		WASHER,#4, FLT SE STL	PRCMT OPTION	MS15795-804
22	6	229-C2-00073		SCREW,4-40X1/4 PAN HD	PRCMT OPTION	MS51957-13
23	4	229-02-00101		SCREW,8-32X7/16 PAN HD	PRCMT OPTION	MS51957-44
24	4	273-C2-CC027		WASHER,#8,INT TCOTH	PRCMT OPTION	MS35333-72
25	4	287-02-00004		NUT,HEX, 8-32	PRCMT OPTION	MS35649-284
26	4	229-02-00075		SCREW,4-40X3/8 PAN HD	PRCMT OPTION	MS51957-15
27	1	353-96-36006		CAP, 3600 UF -10+75% 40V	SPRAGUE	36D362G040AB2A
28	5	140-98-C0006		INS,MICA WASHER TC-3 XSTR	SPR PIN MICA	120
29	10	271-98-00028		WASHER,SHLDR,NYL,.86SCREW	SEASTROM	5607-10
30	2	127-98-00011		GROM,RUBBER,ID.50,MTG .62	GEN CEMENT	#1041-TC OR M
31	4	134-98-C0012		HOLDER,FUSE,.25XL.25FUSE	LITTELFUSE	357C01
32	3	120-98-00012		FUSE,NORM-BLO,1AMP,250V	LITTELFUSE	312C01
33	1	120-99-C0034		FUSE,NORM-BLO,2AMP,250V	LITTELFUSE	312CC2
34	1	263-16-00103		XSTR,PWR NPN, 87W, 4A	MOT	MJ48C
35	2	263-16-C0119		XSTR,PWR PNP, 87W, 4A	MOT	MJ490
37	1	263-10-17910		XSTR,PNP 60V,10A SW-APPL	JEDEC	2N3791
REF 1	1	553-C1-C0002	17685	WIRING DIAG PS OPER VAR		
REF 2	1	905-C5-00189	17685	VARIABLE CHART	EMR	905-C5-00189

FIRST USAGE MODEL, 4342-01

Table 6-2. Recommended Spares List

PART DESCRIPTION	EMR STOCK NO.	VENDOR NAME	VENDOR PART NO.	TQ	RS	PRICE
MODEL 4142-X1						
INTEGRATED CIRCUIT, Follower, NPN	046-89-00009	Spec	12181	4	1	
INTEGRATED CIRCUIT, Follower, PNP	046-89-00010	Spec	12182	4	1	
INTEGRATED CIRCUIT, FET Amplifier	046-89-00022	Spec	14690	3	1	
LIGHT, Assy. Decimal	155-89-00001	Spec	7327	4	1	
INTEGRATED CIRCUIT, Op Ampl	046-34-00001	NSC	LM201	1	1	
DIODE, Rectifier 100V, 1A, I	088-10-40020	JEDEC	1N4002	4	1	
DIODE, Rectifier 400V, 1A, I	088-10-40040	JEDEC	1N4004	8	1	
DIODE	088-10-41480	JEDEC	1N4148	93	10	
DIODE, 4 Pellet 90V VF 2.14	088-19-00029	G.E.	MPD 400	1	1	
DIODE, 1N758A Zener 10.0V	088-99-00259	Spec	642-12	2	1	
DIODE, 1N753A Zener 6.2V	088-99-00329	Spec	642-07	5	1	
DIODE, 1N749A Zener 4.3V	088-99-00339	Spec	642-03	2	1	
FUSE, 1 Amp, 250V	120-98-00012	Littelfuse	312001	3	3	
FUSE, Slo-Blo, 1-1/2 Amp	120-98-00022	Littelfuse	31301.5	1	1	
FUSE, Fast-Blo, 2 Amp	120-98-00034	Littelfuse	312002	1	1	
LAMP, T-1-3/4 28V, .04A	151-02-00001	QVL	MS25237-327	1	1	
LIGHT, 28V, 40 ma	155-98-00011	Eldema	CFW-22556-06	2	1	
POTENTIOMETER, 5K ±10%, 1W	201-98-00033	Amphenol	2600P-502 BS1066	1	1	
POTENTIOMETER, 2K ±10%, 1W	201-98-00089	Amphenol	2600P-202 BS1066	1	1	
RECTIFIER	214-98-00001	Mot	MDA952-2	3	1	
RELAY, 2 Form A Contacts	219-98-00045	Hathaway Ins.	GP-2A-26-P	59	5	
RELAY, 2 Form C Contacts	219-98-00046	Hathaway Ins.	GP-2C-26-FCD	3	1	
RELAY, 4PST, NO, 26V	219-98-00050	Hathaway Ins.	GP-4A-26P	5	1	
RELAY, SPDT, NO, 26V	219-98-00051	Hathaway Ins.	GP-1C-26-FCD	1	1	
RELAY, 1 Form A 125 ma	219-98-00054	Hathaway Ins.	GP-1A-26-P	26	2	
RELAY, 3A, 26V	219-98-00057	Hathaway Ins.	GP-3A-26-P	10	1	

Table 6-2 (Cont'd.). Recommended Spares List

PART DESCRIPTION	EMR STOCK NO.	VENDOR NAME	VENDOR PART NO.	TQ	RS	PRICE
TRANSISTOR, NPN Lo Level Amp, HFE	263-10-09290	JEDEC	2N929	1	1	
TRANSISTOR	263-10-17110	JEDEC	2N1711	2	1	
TRANSISTOR	263-10-30530	JEDEC	2N3053	1	1	
TRANSISTOR	263-10-32510	JEDEC	2N3251	2	1	
TRANSISTOR	263-10-35650	JEDEC	2N3565	18	2	
TRANSISTOR, NPN High Gain, HFE TO	263-10-35660	JEDEC	2N3566	6	1	
TRANSISTOR, NPN VHF/UHF Ampl	263-10-39330	JEDEC	2N3933	15	2	
TRANSISTOR	263-10-39470	JEDEC	2N3947	19	2	
TRANSISTOR	263-10-40370	JEDEC	2N4037	3	1	
TRANSISTOR, SW-Amp 40V, 1A, 30W	263-10-49180	JEDEC	2N4918	2	1	
TRANSISTOR, SW-Amp 40V, 1A, 30W	263-10-49210	JEDEC	2N4921	2	1	
TRANSISTOR	263-16-00109	Mot	MJ480	1	1	
TRANSISTOR	263-16-00119	Mot	MJ490	3	1	
TRANSISTOR, Matched PR, 2 ma PNP	263-35-00029	Amperex	A648/S	2	1	
TRANSISTOR, NPN, Mat. PR, VBE1-VBE2	263-35-00039	Amperex	A642/S	2	1	
TRANSISTOR, PNP 2N3251 SW-Amp, 50	263-99-00139	Spec	805-1	8	1	
CAPACITOR, 22.0 mf ±20%, 15V	337-21-22004	Spec	601	7	1	
CAPACITOR, 6.8 mf ±20%, 35V	337-23-68003	Spec	601	48	4	
CAPACITOR, 100 mf ±20%, 20V	339-22-10005	Spec	601	5	1	
MODEL 4142-X2						
INTEGRATED CIRCUIT, Assy., Follower, NPN	046-89-00009	Spec	12181	6	1	
INTEGRATED CIRCUIT, Assy., Follower, PNP	046-89-00010	Spec	12182	5	1	
INTEGRATED CIRCUIT, Assy., FET Amplifier	046-89-00022	Spec	14690	3	1	
LIGHT, Assy., Decimal	155-89-00001	Spec	7327	4	1	
INTEGRATED CIRCUIT, OP Ampl	046-34-00001	NSC	LM201	2	1	
DIODE, Rectifier 100V, 1A, I	088-10-40020	JEDEC	1N4002	4	1	

Table 6-2 (Cont'd.). Recommended Spares List

PART DESCRIPTION	EMR STOCK NO.	VENDOR NAME	VENDOR PART NO.	TQ	RS	PRICE
DIODE, Rectifier 400V, 1A, I	088-10-40040	JEDEC	1N4004	8	1	
DIODE	088-10-41480	JEDEC	1N4148	116	10	
DIODE, 4 Pellet 90V VF 2.14	088-19-00029	G.E.	MPD 400	1	1	
DIODE, 1N758A Zener 10.0V	088-99-00259	Spec	642-12	2	1	
DIODE, 1N753A Zener 6.2V	088-99-00329	Spec	642-07	5	1	
DIODE, 1N749A Zener 4.3V	088-99-00339	Spec	642-03	2	1	
FUSE, 1 Amp, 250V	120-98-00012	Littelfuse	312001	3	3	
FUSE, Slo-Blo, 1-1/2 Amp	120-98-00022	Littelfuse	31301.5	1	1	
FUSE, Fast-Blo, 2 Amp	120-98-00034	Littelfuse	312002	1	1	
LAMP, T-1-3/4 28V, .04A	151-02-00001	QVL	MS25237-327	1	1	
LIGHT, 28V, 40 ma	155-98-00011	Eldema	CFW-22556-06	2	1	
POTENTIOMETER, 5K ±10%, 1W	201-98-00033	Amphenol	2600P-502 BS1066	1	1	
POTENTIOMETER, 2K ±10%, 1W	201-98-00089	Amphenol	2600P-202 BS1066	1	1	
RECTIFIER	214-98-00001	Mot	MDA952-2	3	1	
RELAY, 2 Form A Contacts	219-98-00045	Hathaway Ins.	GP-2A-26-P	59	5	
RELAY, 2 Form C Contacts	219-98-00046	Hathaway Ins.	GP-2C-26-FCD	3	1	
RELAY, 4PST, NO, 26V	219-98-00050	Hathaway Ins.	GP-4A-26-P	5	1	
RELAY, SPDT, NO, 26V	219-98-00051	Hathaway Ins.	GP-1C-26-FCD	1	1	
RELAY, 1 Form A 125 ma	219-98-00054	Hathaway Ins.	GP-1A-26-P	49	4	
RELAY, 3A, 26V	219-98-00057	Hathaway Ins.	GP-3A-26-P	10	1	
TRANSISTOR, NPN Lo Level Amp, HFE	263-10-09290	JEDEC	2N929	1	1	
TRANSISTOR	263-10-17110	JEDEC	2N1711	2	1	
TRANSISTOR	263-10-30530	JEDEC	2N3053	1	1	
TRANSISTOR	263-10-32510	JEDEC	2N3251	2	1	
TRANSISTOR	263-10-35650	JEDEC	2N3565	18	2	
TRANSISTOR, NPN High Gain, HFE TO	263-10-35660	JEDEC	2N3566	6	1	
TRANSISTOR, NPN VHF/UHF Ampl	263-10-39330	JEDEC	2N3933	15	2	

Table 6-2 (Cont'd.). Recommended Spares List

PART DESCRIPTION	EMR STOCK NO.	VENDOR NAME	VENDOR PART NO.	TQ	RS	PRICE
TRANSISTOR	263-10-39470	JEDEC	2N3947	19	2	
TRANSISTOR	263-10-40370	JEDEC	2N4037	3	1	
TRANSISTOR, SW-Amp 40V, 1A, 30W	263-10-49180	JEDEC	2N4918	2	1	
TRANSISTOR, SW-Amp 40V, 1A, 30W	263-10-49210	JEDEC	2N4921	2	1	
TRANSISTOR	263-16-00109	Mot	MJ480	1	1	
TRANSISTOR	263-16-00119	Mot	MJ490	3	1	
TRANSISTOR, Matched PR, 2 ma, PNP	263-35-00029	Amperex	A648/S	2	1	
TRANSISTOR, NPN, Mat. PR., VBE1-VBE2	263-35-00039	Amperex	A642/S	2	1	
TRANSISTOR, PNP 2N3251 SW-Amp, 50	263-99-00139	Spec	805-1	8	1	
CAPACITOR, 22.0 mf ±20%, 15V	337-21-22004	Spec	601	7	1	
CAPACITOR, 6.8 mf ±20%, 35V	337-23-68003	Spec	601	55	5	
CAPACITOR, 100 mf ±20%, 20V	339-22-10005	Spec	601	5	1	
MODEL 4142-X3						
INTEGRATED CIRCUIT, Assy., Follower, NPN	046-89-00009	Spec	12181	4	1	
INTEGRATED CIRCUIT, Assy., Follower, PNP	046-89-00010	Spec	12182	4	1	
INTEGRATED CIRCUIT, Assy., FET Amplifier	046-89-00022	Spec	14690	5	1	
LIGHT, Assy., Decimal	155-89-00001	Spec	7327	4	1	
INTEGRATED CIRCUIT, OP Ampl	046-34-00001	NSC	LM201	1	1	
DIODE, Rectifier 100V, 1A, I	088-10-40020	JEDEC	1N4002	4	1	
DIODE, Rectifier 400V, 1A, I	088-10-40040	JEDEC	1N4004	8	1	
DIODE	088-10-41480	JEDEC	1N4148	112	10	
DIODE, 4 Pellet 90V VF 2.14	088-19-00029	G.E.	MPD 400	1	1	
DIODE, 1N758A Zener 10.0V	088-99-00259	Spec	642-12	2	1	
DIODE, 1N753A Zener 6.2V	088-99-00329	Spec	642-07	5	1	
DIODE, 1N749A Zener 4.3V	088-99-00339	Spec	642-03	2	1	
FUSE, 1 Amp, 250V	120-98-00012	Littelfuse	312001	3	3	
FUSE, Slo-Blo, 1-1/2 Amp	120-98-00022	Littelfuse	31301.5	1	1	

Table 6-2 (Cont'd.). Recommended Spares List

PART DESCRIPTION	EMR STOCK NO.	VENDOR NAME	VENDOR PART NO.	TQ	RS	PRICE
FUSE, Fast-Blo, 2 Amp	120-98-00034	Littelfuse	312002	1	1	
LAMP, T-1-3/4 28V, .04A	151-02-00001	QVL	MS25237-327	1	1	
LIGHT, 28V, 40 ma	155-98-00011	Eldema	CFW-22556-06	2	1	
POTENTIOMETER, 5K ±10%, 1W	201-98-00033	Amphenol	2600P-502 BS1066	1	1	
POTENTIOMETER, 2K ±10%, 1W	201-98-00089	Amphenol	2600P-202 BS1066	1	1	
RECTIFIER	214-98-00001	Mot	MDA952-2	3	1	
RELAY, 2 Form A Contacts	219-98-00045	Hathaway Ins.	GP-2A-26-P	68	6	
RELAY, 2 Form C Contacts	219-98-00046	Hathaway Ins.	GP-2C-26-FCD	4	1	
RELAY, 4PST, NO, 26V	219-98-00050	Hathaway Ins.	GP-4A-26-P	10	1	
RELAY, SPDT, NO, 26V	219-98-00051	Hathaway Ins.	GP-1C-26-FCD	1	1	
RELAY, 1 Form A 125 ma	219-98-00054	Hathaway Ins.	GP-1A-26-P	26	2	
RELAY, 3A, 26V	219-98-00057	Hathaway Ins.	GP-3A-26-P	10	1	
TRANSISTOR, NPN Lo Level Amp, HFE	263-10-09290	JEDEC	2N929	1	1	
TRANSISTOR	263-10-17110	JEDEC	2N1711	2	1	
TRANSISTOR	263-10-30530	JEDEC	2N3053	1	1	
TRANSISTOR	263-10-32510	JEDEC	2N3251	2	1	
TRANSISTOR	263-10-35650	JEDEC	2N3565	18	2	
TRANSISTOR, NPN High Gain, HFE TO	263-10-35660	JEDEC	2N3566	6	1	
TRANSISTOR, NPN VHF/UHF Ampl	263-10-39330	JEDEC	2N3933	15	2	
TRANSISTOR	263-10-39470	JEDEC	2N3947	19	2	
TRANSISTOR	263-10-40370	JEDEC	2N4037	3	1	
TRANSISTOR, SW-Amp 40V, 1A, 30W	263-10-49180	JEDEC	2N4918	2	1	
TRANSISTOR, SW-Amp 40V, 1A, 30W	263-10-49210	JEDEC	2N4921	2	1	
TRANSISTOR	263-16-00109	Mot	MJ480	1	1	
TRANSISTOR	263-16-00119	Mot	MJ490	3	1	
TRANSISTOR, Matched PR, 2 ma, PNP	263-35-00029	Amperex	A648/S	2	1	
TRANSISTOR, NPN, Mat. PR, VBE1-VBE2	263-35-00039	Amperex	A642/S	2	1	
TRANSISTOR, PNP 2N3251 SW-Amp, 50	263-99-00139	Spec	805-1	8	1	

Table 6-2 (Cont'd.). Recommended Spares List

PART DESCRIPTION	EMR STOCK NO.	VENDOR NAME	VENDOR PART NO.	TQ	RS	PRICE
CAPACITOR, 22.0 mf ±20%, 15V	337-21-22004	Spec	601	7	1	
CAPACITOR, 6.8 mf ±20%, 35V	337-23-68003	Spec	601	51	5	
CAPACITOR, 100 mf ±20%, 20V	339-22-10005	Spec	601	5	1	
MODEL 4142-X4						
INTEGRATED CIRCUIT, Assy, Follower, NPN	046-89-00009	Spec	12181	6	1	
INTEGRATED CIRCUIT, Assy, Follower, PNP	046-89-00010	Spec	12182	5	1	
INTEGRATED CIRCUIT, Assy, FET Amplifier	046-89-00022	Spec	14690	5	1	
LIGHT, Assy, Decimal	155-89-00001	Spec	7327	4	1	
INTEGRATED CIRCUIT, OP Ampl	046-34-00001	NSC	LM201	2	1	
DIODE, 1N758A Zener 10.0V	088-99-00259	Spec	642-12	2	1	
DIODE, 1N753A Zener 6.2V	088-99-00329	Spec	642-07	5	1	
DIODE, 1N749A Zener 4.3V	088-99-00339	Spec	642-03	2	1	
FUSE, 1 Amp, 250V	120-98-00012	Littelfuse	312001	3	3	
FUSE, Slo-Blo, 1-1/2 Amp	120-98-00022	Littelfuse	31301.5	1	1	
FUSE, Fast-Blo, 2 Amp	120-98-00034	Littelfuse	312002	1	1	
LAMP, T-1-3/4 28V, .04A	151-02-00001	QVL	MS25237-327	1	1	
LIGHT, 28V, 40 ma	155-98-00011	Eldema	CFW-22556-06	2	1	
POTENTIOMETER, 5K ±10%, 1W	201-98-00033	Amphenol	2600P-502 BS1066	1	1	
POTENTIOMETER, 2K ±10%, 1W	201-98-00089	Amphenol	2600P-202 BS1066	1	1	
RECTIFIER -	214-98-00001	Mot	MDA952-2	3	1	
RELAY, 2 Form A Contacts	219-98-00045	Hathaway Ins.	GP-2A-26-P	68	6	
RELAY, 2 Form C Contacts	219-98-00046	Hathaway Ins.	GP-2C-26-FCD	4	1	
RELAY, 4PST, NO, 26V	219-98-00050	Hathaway Ins.	GP-4A-26-P	10	1	
RELAY, SPDT, NO, 26V	219-98-00051	Hathaway Ins.	GP-1C-26-FCD	1	1	

Table 6-2 (Cont'd.). Recommended Spares List

PART DESCRIPTION	EMR STOCK NO.	VENDOR NAME	VENDOR PART NO.	TQ	RS	PRICE
RELAY, 1 Form A 125 ma	219-98-00054	Hathaway Ins.	GP-1A-26-P	49	4	
RELAY, 3A, 26V	219-98-00057	Hathaway Ins.	GP-3A-26-P	10	1	
TRANSISTOR, NPN Lo Level Amp, HFE	263-10-09290	JEDEC	2N929	1	1	
TRANSISTOR	263-10-17110	JEDEC	2N1711	2	1	
TRANSISTOR	263-10-30530	JEDEC	2N3053	1	1	
TRANSISTOR	263-10-32510	JEDEC	2N3251	2	1	
TRANSISTOR	263-10-35650	JEDEC	2N3565	18	2	
TRANSISTOR, NPN High Gain, HFE TO	263-10-35660	JEDEC	2N3566	6	1	
TRANSISTOR, NPN VHF/UHF Ampl	263-10-39330	JEDEC	2N3933	15	2	
TRANSISTOR	263-10-39470	JEDEC	2N3947	19	2	
TRANSISTOR	263-10-40370	JEDEC	2N4037	3	1	
TRANSISTOR, SW-Amp 40V, 1A, 30W	263-10-49180	JEDEC	2N4918	2	1	
TRANSISTOR, SW-Amp 40V, 1A, 30W	263-10-49210	JEDEC	2N4921	2	1	
TRANSISTOR	263-16-00109	Mot	MJ480	1	1	
TRANSISTOR	263-16-00119	Mot	MJ490	3	1	
TRANSISTOR, Matched PR, 2 ma, PNP	263-35-00029	Amperex	A648/S	2	1	
TRANSISTOR, NPN, Mat. PR, VBE1-VBE2	263-35-00039	Amperex	A642/S	2	1	
TRANSISTOR, PNP 2N3251 SW-Amp, 50	263-99-00139	Spec	805-1	8	1	
CAPACITOR, 22.0 mf ±20%, 15V	337-21-22004	Spec	601	7	1	
CAPACITOR, 6.8 mf ±20%, 35V	337-23-68003	Spec	601	58	5	
CAPACITOR, 100 mf ±20%, 20V	339-22-10005	Spec	601	5	1	
MODEL 4142-X5						
INTEGRATED CIRCUIT, Assy, Follower, NPN	046-89-00009	Spec	12181	4	1	
INTEGRATED CIRCUIT, Assy, Follower, PNP	046-89-00010	Spec	12182	4	1	
INTEGRATED CIRCUIT, Assy, FET Amplifier	046-89-00022	Spec	14690	8	1	
LIGHT, Assy, Decimal	155-89-00001	Spec	7327	4	1	
INTEGRATED CIRCUIT, OP Ampl	046-34-00001	NSC	LM201	1	1	

Table 6-2 (Cont'd.). Recommended Spares List

PART DESCRIPTION	EMR STOCK NO.	VENDOR NAME	VENDOR PART NO.	TQ	RS	PRICE
DIODE, Rectifier 100V, 1A, I	088-10-40020	JEDEC	1N4002	4	1	
DIODE, Rectifier 400V, 1A, I	088-10-40040	JEDEC	1N4004	8	1	
DIODE	088-10-41480	JEDEC	1N4148	131	10	
DIODE, 4 Pellet 90V VF 2.14	088-19-00029	G.E.	MPD 400	5	1	
DIODE, 1N758A Zener 10.0V	088-99-00259	Spec	642-12	2	1	
DIODE, 1N753A Zener 6.2V	088-99-00329	Spec	642-07	5	1	
DIODE, 1N749A Zener 4.3V	088-99-00339	Spec	642-03	2	1	
FUSE, 1 Amp, 250V	120-98-00012	Littelfuse	312001	3	3	
FUSE, Slo-Blo, 1-1/2 Amp	120-98-00022	Littelfuse	31301.5	1	1	
FUSE, Fast-Blo, 2 Amp	120-98-00034	Littelfuse	312002	1	1	
LAMP, T-1-3/4 28V, .04A	151-02-00001	QVL	MS25237-327	1	1	
LIGHT, 28V, 40 ma	155-98-00011	Eldema	CFW-22556-06	2	1	
POTENTIOMETER, 5K ±10%, 1W	201-98-00033	Amphenol	2600P-502 BS1066	1	1	
POTENTIOMETER, 2K ±10%, 1W	201-98-00089	Amphenol	2600P-202 BS1066	1	1	
RECTIFIER	214-98-00001	Mot	MDA952-2	3	1	
RELAY, 2 Form A Contacts	219-98-00045	Hathaway Ins.	GP-2A-26-P	77	7	
RELAY, 2 Form C Contacts	219-98-00046	Hathaway Ins.	GP-2C-26-FCD	5	1	
RELAY, 4PST, NO, 26V	219-98-00050	Hathaway Ins.	GP-4A-26-P	15	1	
RELAY, SPDT, NO, 26V	219-98-00051	Hathaway Ins.	GP-1C-26-FCD	1	1	
RELAY, 1 Form A 125 ma	219-98-00054	Hathaway Ins.	GP-1A-26-P	26	2	
RELAY, 3A, 26V	219-98-00057	Hathaway Ins.	GP-3A-26-P	10	1	
RELAY, DPDT, 26.5V, 1350 ohms	219-98-00062	Bourns/WABCO	3115H/91260-301	1	1	
TRANSISTOR, NPN Lo Level Amp. HFE	263-10-09290	JEDEC	2N929	1	1	
TRANSISTOR	263-10-17110	JEDEC	2N1711	2	1	
TRANSISTOR	263-10-30530	JEDEC	2N3053	1	1	
TRANSISTOR	263-10-32510	JEDEC	2N3251	2	1	

Table 6-2 (Cont'd.). Recommended Spares List

PART DESCRIPTION	EMR STOCK NO.	VENDOR NAME	VENDOR PART NO.	TQ	RS	PRICE
TRANSISTOR	263-10-35650	JEDEC	2N3565	18	2	
TRANSISTOR, NPN High Gain, HFE TO	263-10-35660	JEDEC	2N3566	6	1	
TRANSISTOR, NPN VHF/UHF Ampl	263-10-39330	JEDEC	2N3933	15	2	
TRANSISTOR	263-10-39470	JEDEC	2N3947	19	2	
TRANSISTOR	263-10-40370	JEDEC	2N4037	3	1	
TRANSISTOR, SW-Amp 40V, 1A, 30W	263-10-49180	JEDEC	2N4918	2	1	
TRANSISTOR, SW-Amp 40V, 1A, 30W	263-10-49210	JEDEC	2N4921	2	1	
TRANSISTOR	263-16-00109	Mot	MJ480	1	1	
TRANSISTOR	263-16-00119	Mot	MJ490	3	1	
TRANSISTOR, Matched PR, 2 ma, PNP	263-35-00029	Amperex	A648/S	2	1	
TRANSISTOR, NPN, Mat. PR, VBE1-VBE2	263-35-00039	Amperex	A642/S	2	1	
TRANSISTOR	263-99-00089	Spec	666	1	1	
TRANSISTOR, PNP 2N3251 SW-Amp, 50	263-99-00139	Spec	805-1	8	1	
CAPACITOR, 22.0 mf ±20%, 15V	337-21-22004	Spec	601	7	1	
CAPACITOR, 6.8 mf ±20%, 35V	337-23-68003	Spec	601	54	5	
CAPACITOR, 100 mf ±20%, 20V	339-22-10005	Spec	601	5	1	
MODEL 4142-X6						
INTEGRATED CIRCUIT, Assy, Follower, NPN	046-89-00009	Spec	12181	6	1	
INTEGRATED CIRCUIT, Assy, Follower, PNP	046-89-00010	Spec	12182	5	1	
INTEGRATED CIRCUIT, Assy, FET Amplifier	046-89-00022	Spec	14690	8	1	
LIGHT, Assy, Decimal	155-89-00001	Spec	7327	4	1	
INTEGRATED CIRCUIT, OP Ampl	046-34-00001	NSC	LM201	2	1	
DIODE, Rectifier 100V, 1A, I	088-10-40020	JEDEC	1N4002	4	1	
DIODE, Rectifier 400V, 1A, I	088-10-40040	JEDEC	1N4004	8	1	
DIODE	088-10-41480	JEDEC	1N4148	154	10	
DIODE, 4 Pellet 90V VF 2.14	088-19-00029	G.E.	MPD 400	5	1	
DIODE, 1N758A Zener 10.0V	088-99-00259	Spec	642-12	2	1	

Table 6-2 (Cont'd.). Recommended Spares List

PART DESCRIPTION	EMR STOCK NO.	VENDOR NAME	VENDOR PART NO.	TQ	RS	PRICE
DIODE, 1N753A Zener 6.2V	088-99-00329	Spec	642-07	5	1	
DIODE, 1N749A Zener 4.3V	088-99-00339	Spec	642-03	2	1	
FUSE, 1 Amp, 250V	120-98-00012	Littelfuse	312001	3	3	
FUSE, Slo-Blo, 1-1/2 Amp	120-98-00022	Littelfuse	31301.5	1	1	
FUSE, Fast-Blo, 2 Amp	120-98-00034	Littelfuse	312002	1	1	
LAMP, T-1-3/4 28V, .04A	151-02-00001	QVL	MS25237-327	1	1	
LIGHT, 28V, 40 ma	155-98-00011	Eldema	CFW-22556-06	2	1	
POTENTIOMETER, 5K ±10%, 1W	201-98-00033	Amphenol	2600P-502 BS1066	1	1	
POTENTIOMETER, 2K ±10%, 1W	201-98-00089	Amphenol	2600P-202 BS1066	1	1	
RECTIFIER	214-98-00001	Mot	MDA952-2	3	1	
RELAY, 2 Form A Contacts	219-98-00045	Hathaway Ins.	GP-2A-26-P	77	7	
RELAY, 2 Form C Contacts	219-98-00046	Hathaway Ins.	GP-2C-26-FCD	5	1	
RELAY, 4PST, NO, 26V	219-98-00050	Hathaway Ins.	GP-4A-26-P	15	1	
RELAY, SPDT, NO, 26V	219-98-00051	Hathaway Ins.	GP-1C-26-FCD	1	1	
RELAY, 1 Form A 125 ma	219-98-00054	Hathaway Ins.	GP-1A-26-P	49	4	
RELAY, 3A, 26V	219-98-00057	Hathaway Ins.	GP-3A-26-P	10	1	
RELAY, DPDT, 26.5V, 1350 ohms	219-98-00062	Bourns/WABCO	3115H/91260-301	1	1	
TRANSISTOR, NPN Lo Level Amp, HFE	263-10-09290	JEDEC	2N929	1	1	
TRANSISTOR	263-10-17110	JEDEC	2N1711	2	1	
TRANSISTOR	263-10-30530	JEDEC	2N3053	1	1	
TRANSISTOR	263-10-32510	JEDEC	2N3251	2	1	
TRANSISTOR	263-10-35650	JEDEC	2N3565	18	2	
TRANSISTOR, NPN High Gain, HFE TO	263-10-35660	JEDEC	2N3566	6	1	
TRANSISTOR, NPN VHF/UHF Ampl	263-10-39330	JEDEC	2N3933	15	2	
TRANSISTOR	263-10-39470	JEDEC	2N3947	19	2	
TRANSISTOR	263-10-40370	JEDEC	2N4037	3	1	

Table 6-2 (Cont'd.). Recommended Spares List

PART DESCRIPTION	EMR STOCK NO.	VENDOR NAME	VENDOR PART NO.	TQ	RS	PRICE
TRANSISTOR, SW-Amp 40V, 1A, 30W	263-10-49180	JEDEC	2N4918	2	1	
TRANSISTOR, SW-Amp 40V, 1A, 30W	263-10-49210	JEDEC	2N4921	2	1	
TRANSISTOR	263-16-00109	Mot	MJ480	1	1	
TRANSISTOR	263-16-00119	Mot	MJ490	3	1	
TRANSISTOR, Matched PR, 2 ma, PNP	263-35-00029	Amperex	A648/S	2	1	
TRANSISTOR, NPN, Mat. PR, VBE1-VBE2	263-35-00039	Amperex	A642/S	2	1	
TRANSISTOR, PNP 2N3251 SW-Amp, 50	263-99-00139	Spec	805-1	8	1	
CAPACITOR, 22.0 mf ±20%, 15V	337-21-22004	Spec	601	7	1	
CAPACITOR, 6.8 mf ±20%, 35V	337-23-68003	Spec	601	61	6	
CAPACITOR, 100 mf ±20%, 20V	339-22-10005	Spec	601	5	1	

Table 6-3. Vendor List

ABBREV.	VENDOR NAME AND ADDRESS
ALCO	Alco Electronics Manufacturing Co., Lawrence, Mass.
ALLEN BRAD	Allen-Bradley Co., Milwaukee, Wis.
ALPHLEX	Alpha Wire Corp., Elizabeth, N. J.
AMATHOM	Amathom Electronic Hdwr. Co., Inc., New Rochelle, N. Y.
AMER RADION	American Radionic Co., Inc., 51 Austin, Danbury, Conn.
AMER SEALANT	American Sealants Co., Hartford, Conn.
AMPEREX	Amperex Electronic Co., Hicksville, N. Y.
AMPH BORG	Amphenol Corp., Broadview, Ill.
AMPHENOL	Amphenol Corp., Los Gatos, Calif.
AMP INC.	Amp, Inc., Harrisburg, Pa.
ARCO	Arco Electronics, Inc., Community Drive, Great Neck, N. Y.
ASM	The ASM Corp., Smithfield, North Carolina
BECK INSTR	Beckman Instruments, Inc., Fullerton, Calif.
BECKMAN	Beckman Instruments, Inc., Fullerton, Calif.
BIRNBACH	Birnbach Radio Co., Inc., New York, N. Y.
BOURNS	Bourns, Inc., Riverside, Calif.
BURNDY	Burndy Corp., Norwalk, Conn.
CANNON	ITT Cannon Electric, Los Angeles, Calif.
CARR FAST	Carr Fastener Co., Cambridge, Mass.
CDE	Cornell-Dubilier Electronics, Newark, N. J.
CHI MIN LAMP	Chicago Miniature Lamp Works, Chicago, Ill.
C & K	C & K Components, Inc., Newton, Mass.

Table 6-3 (Cont'd.). Vendor List

ABBREV.	VENDOR NAME AND ADDRESS
CKT STRU	Circuit Structures Lab., Santa Ana, Calif.
CINCH	Cinch Mfg. Co., Chicago, Ill.
CLAROSTAT	Clarostat Mfg. Co., Dover, N. H.
CONTINENTAL	Continental Connector Corp., Woodside, N. Y.
CTS	CTS Corp., Elkhart, Ind.
DALE	Dale Electronics, Inc., P.O. Box 609, Columbus, Nebraska
DAYSTROM	Weston Components, Div. of Weston Instruments, Inc., Archbald, Pa.
DEL BLINN	Delbert/Blinn Co., Pomona, Calif.
DOUG RAND	Douglas Randall, Inc., 6 Pawcatuck Ave., Westerly,R.I.
EASTMAN	Eastman Chemical Products, Inc., Chemicals Division, Subsidiary of Eastman Kodak Co., Kingsport, Tenn.
EECO	Engineered Electronics Co., Inc., Santa Ana, Calif.
E. F. JOHNSON	E. F. Johnson Co., Waseca, Minn.
ELCO	Elco Corp., Willow Grove, Pa.
ELDEMA	Eldema Corp., Compton, Calif.
EMR-C	EMR-Computer, Div. of Weston Instruments, Inc., 8001 Bloomington Freeway, Minneapolis, Minnesota
EMR-T	EMR-Telemetry, Div. of Weston Instruments, Inc., Sarasota, Florida
ERIE	Erie Technological Products, Inc., Erie, Pa.
FCH	Fairchild Camera and Instrument Corp., Mountain View, Calif.
FERROX-CUBE	Ferroxcube Corp. of America, Saugerties, Calif.
GEN CEMENT	General Cement, Div. of Textron, Inc., Rockford, Ill.

Table 6-3 (Cont'd.). Vendor List

ABBREV.	VENDOR NAME AND ADDRESS
G. E.	General Electric Co., Miniature Lamp Dept., Cleveland, Ohio
GRAYHILL	Grayhill, Inc., La Orange, Ill.
HARTWELL	Hartwell Corp., Los Angeles, Calif.
HATHAWAY INS.	Hathaway Instruments, Inc., Denver, Colorado
H. H. SMITH	Herman H. Smith, Inc., Brooklyn, N. Y.
HUBBELL	Harvey Hubbel, Inc., Bridgeport, Conn.
IEE	Industrial Electronic Engineers, Inc., 7720 Lemona Ave., Van Nuys, Calif.
IERC	International Electronic Research Corp., Burbank, Calif.
IRC	IRC, Inc., Burlington, Iowa
JEDEC	
LITTELFUSE	Littelfuse, Inc., Des Plaines, Ill.
MALLORY	Mallory Capacitor Co., 3029 E. Washington St., Indianapolis, Indiana
MIDWEC	Midwec Corp., 602 Main, Oshkosh, Nebr.
MILTON ROSS	Milton Ross Metals Co., Southampton, Pa.
MML (NO.)	EMR-Telemetry Multiple Manufacturers List, EMR-Telemetry, Div. of Weston Instruments, Inc., Sarasota, Florida
MOT	Motorola Semiconductor Products, Inc., Phoenix, Ariz.
NSC	National Semiconductor Corp., Santa Clara, Calif.
PENDAR	Clare-Pendar, Inc., Post Falls, Idaho
QVL	Qualified Vendor List
RCA	Radio Corp. of America, Somerville, N. J.

Table 6-3 (Cont'd.). Vendor List

ABBREV.	VENDOR NAME AND ADDRESS
RIEDON	Riedon Avionics, Inc., Van Nuys, Calif.
ROSS MFG.	Ross Mfg. Co., Cleveland, Ohio
ROTRON MFG.	Rotron Manufacturing Co., Inc., Woodstock, N. Y.
SCANBE	Scanbe Mfg. Corp., Monterey Park, Calif.
SEALECTRO	Sealectro Corp., Mamaroneck, N. Y.
SEASTROM	Seastrom Mfg. Co., Glendale, Calif.
SHAKEPROOF	Shakeproof, Div. of Illinois Tool Works, Inc., Elgin, Ill.
SIG	Signetics Corp., Sunnyvale, Calif.
SOUTHCO	South Coast Co., Newport Beach, Calif.
SPEC (EMR-T)	EMR-Telemetry, Div. of Weston Instruments, Inc., Sarasota, Florida
SPRAGUE	Sprague Electric Corp., Bristol, Conn.
SUPERIOR	Superior Electric Co., Bristol, Conn.
SYL	Sylvania Electric Products, Inc., Semiconductor Div., Woburn, Mass.
TEPRO	Tepro of Florida, Inc., Dunedin, Florida
T. I.	Texas Instrument, Inc., Dallas, Texas
USECO	Useco, Inc., Mt. Vernon, N. Y.
WABCO	Westinghouse Air Brake Co., Signal and Communications Div., Pittsburgh, Pa.
WAKEFIELD	Wakefield Engineering, Inc., Wakefield, Mass.

Table 6-4. Customer Provisioning Questionnaire

1.	Equipment to be spared Model No. (s): _____ Serial No. (s): _____
2.	Number of equipments to be spared in each location _____
3.	Operating time and cycle: _____ hours/day, _____ days/ week.
4.	Operating Environment: A. Temperature: _____ B. Humidity: _____ C. Altitude: _____ D. Shock and Vibration: _____
5.	Non-operating Environment: _____ A. Temperature: _____ B. Humidity: _____ C. Altitude: _____
6.	Desired probability of being able to spare from complement _____ percent for _____ months.
7.	Can usage permit troubleshooting to parts level when a failure occurs? _____
8.	What spare assemblies do you have that are used in this Model Equipment? _____
9.	Do you wish us to exclude the EMR warranty period? _____

TECHNICAL MANUAL UTILITY REPORT

At EMR, we continuously strive to produce high quality and usable technical manuals for our equipment. To help us in this regard, we request that after reading and using this manual, you record your comments and suggestions on this utility report and return it to EMR. When completed, remove this page from manual, fold on dotted lines, staple, and mail. Insert additional sheets if necessary.

Manual Title and Publication Date:

_____

_____

_____

_____

Report Submitted By:

Name _____

Title _____

Orgn. _____

Date _____

Comments or Suggestions:

(Fold along this line)

BUSINESS REPLY MAIL
No Postage Stamp Necessary if Mailed in the United States

(Staple here)

(Staple here)

Postage will be paid by

EMR-TELEMETRY
P. O. BOX 3041
SARASOTA, FLA. 33578

Attn: Technical Publications
Mail Stop No. 22

(Fold along this line)

PRESSBOARD BINDER

GENUINE TYPE 1 PRESSBOARD

STOCK NO. R118

101070